LIKHA FABLAB

Introductory Manual for Onshape

MANUFACTURING RESEARCH CENTER - LIKHA FABLAB

Labspace for Innovation, Knowledge-honing and Application

onshape®

LIKHA FABLAB

Onshape

The most popular cloud-native platform for product development, Onshape offers professional-grade CAD along with integrated PDM, CAM, simulation, rendering, and other features.

The Platform that allows you to create 2D and 3D designs.

onshape®

LIKHA FABLAB

BATANGAS STATE UNIVERSITY
The National Engineering University

How to Get Started?

First, open the browser access the page thru this link;
https://www.onshape.com/en/

Click “Create an Account“ it will redirect you to a new page.

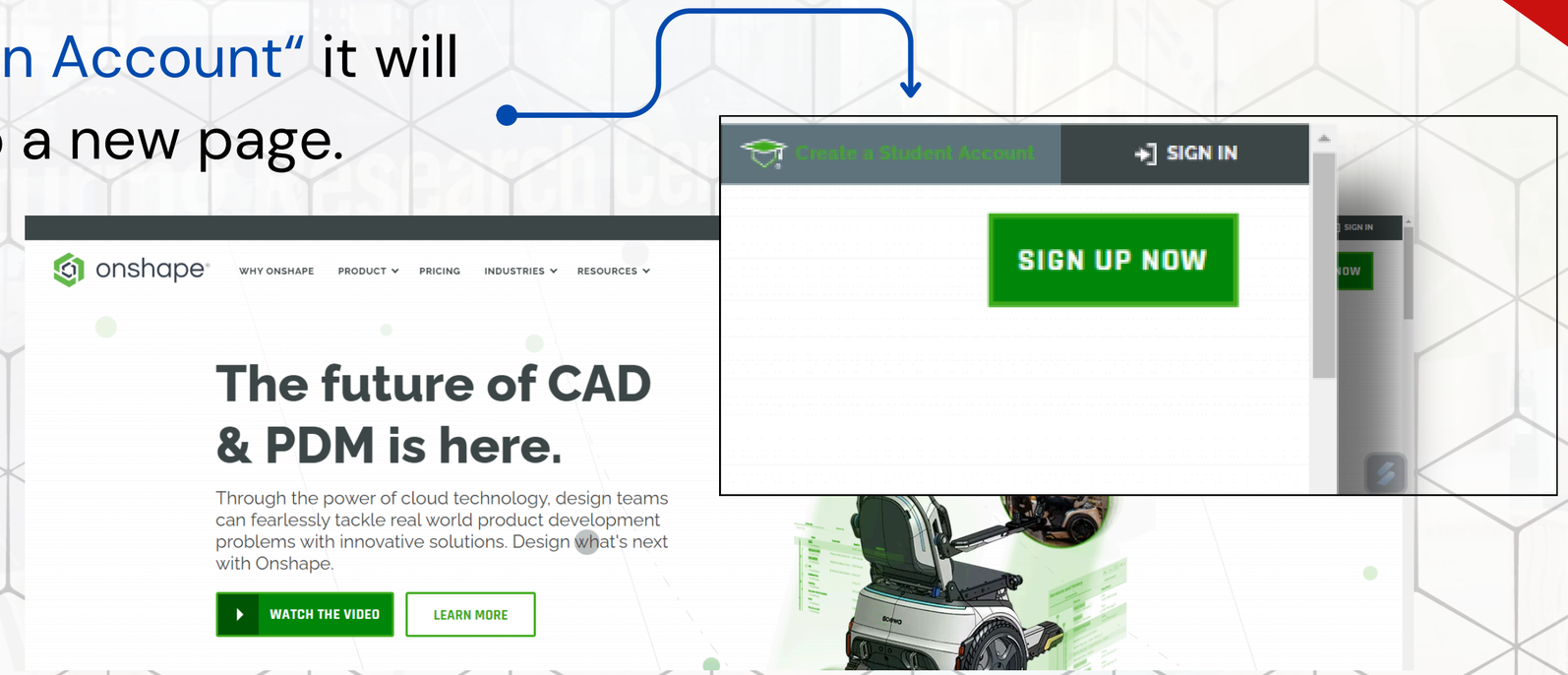

onshape®

LIKHA FABLAB

Creating an Account

Fill out the required details then click Create Account. The platform will send an Email as verification then once your done with the verification, you're good to go.

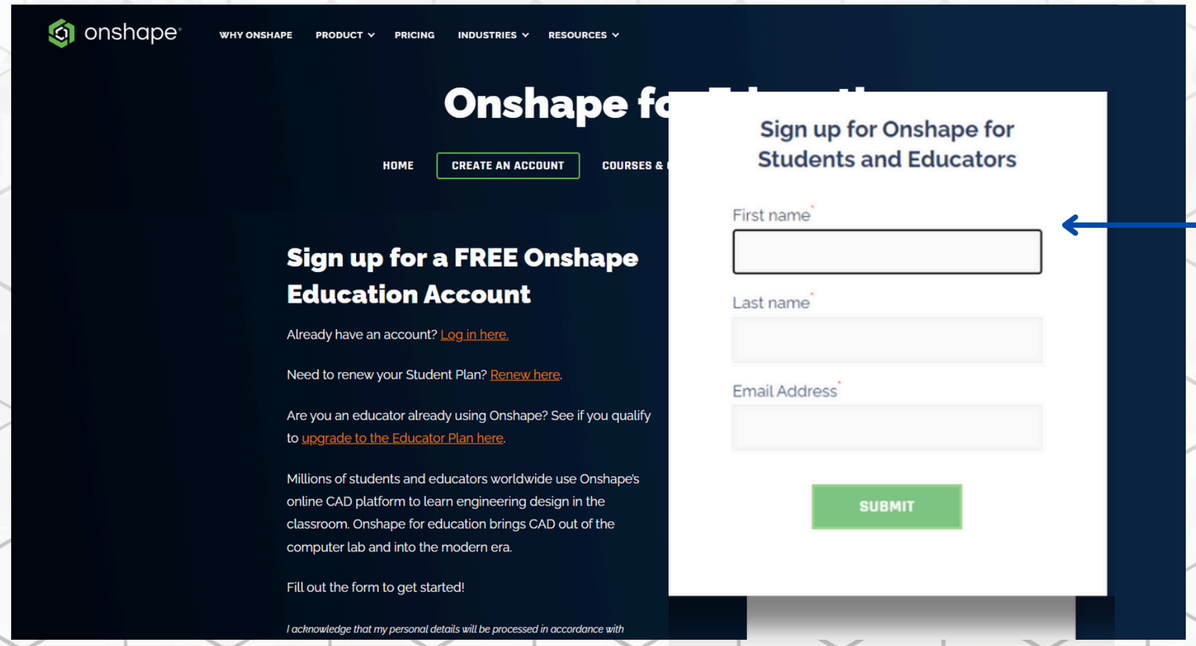

onshape®

LIKHA FABLAB

BATANGAS STATE UNIVERSITY
The National Engineering University

Sign In

Back to Onshape page, click Sign In

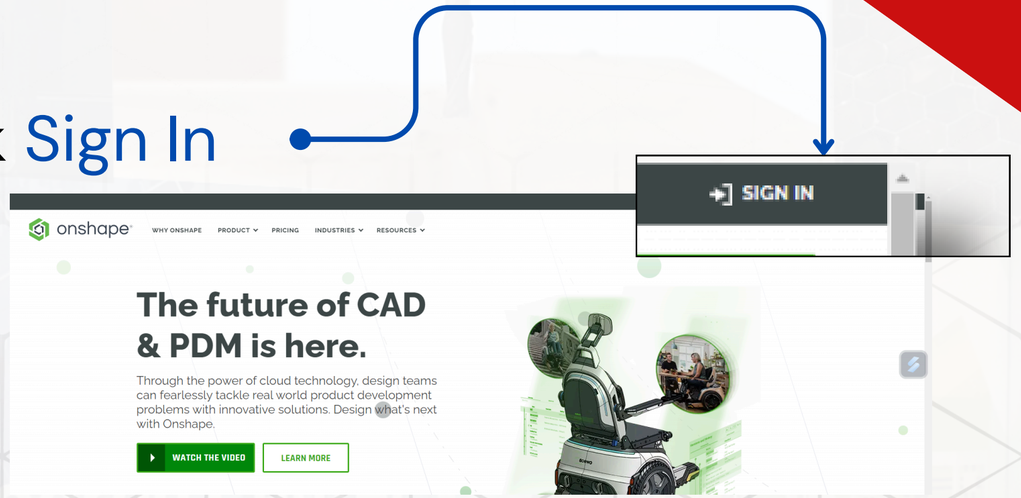

Once you signed in it will bring you to Document Page

This is where you can also access your previous and recent create documents.

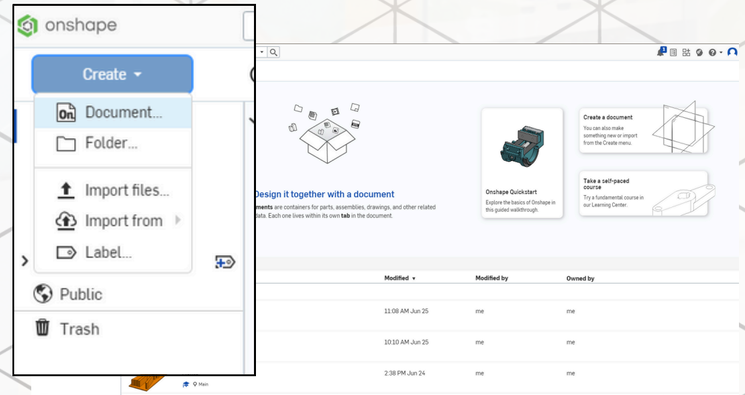

onshape®

Creating Document

To create new document click Document.

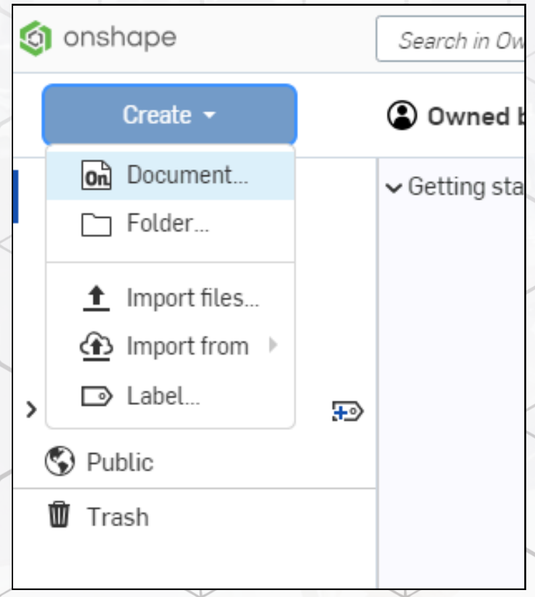

Then a new document will pop up on the screen. Where you must put your Document file name.

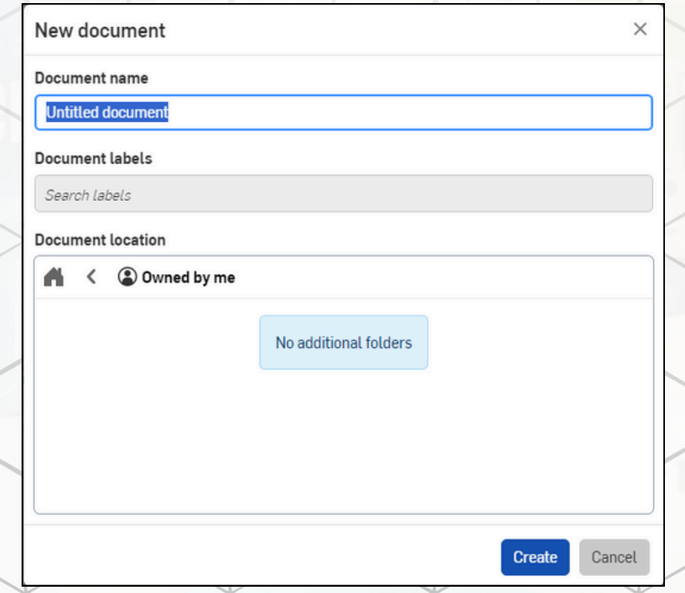

LIKHA FABLAB

Onshape user interface

Navigating through the Workspace

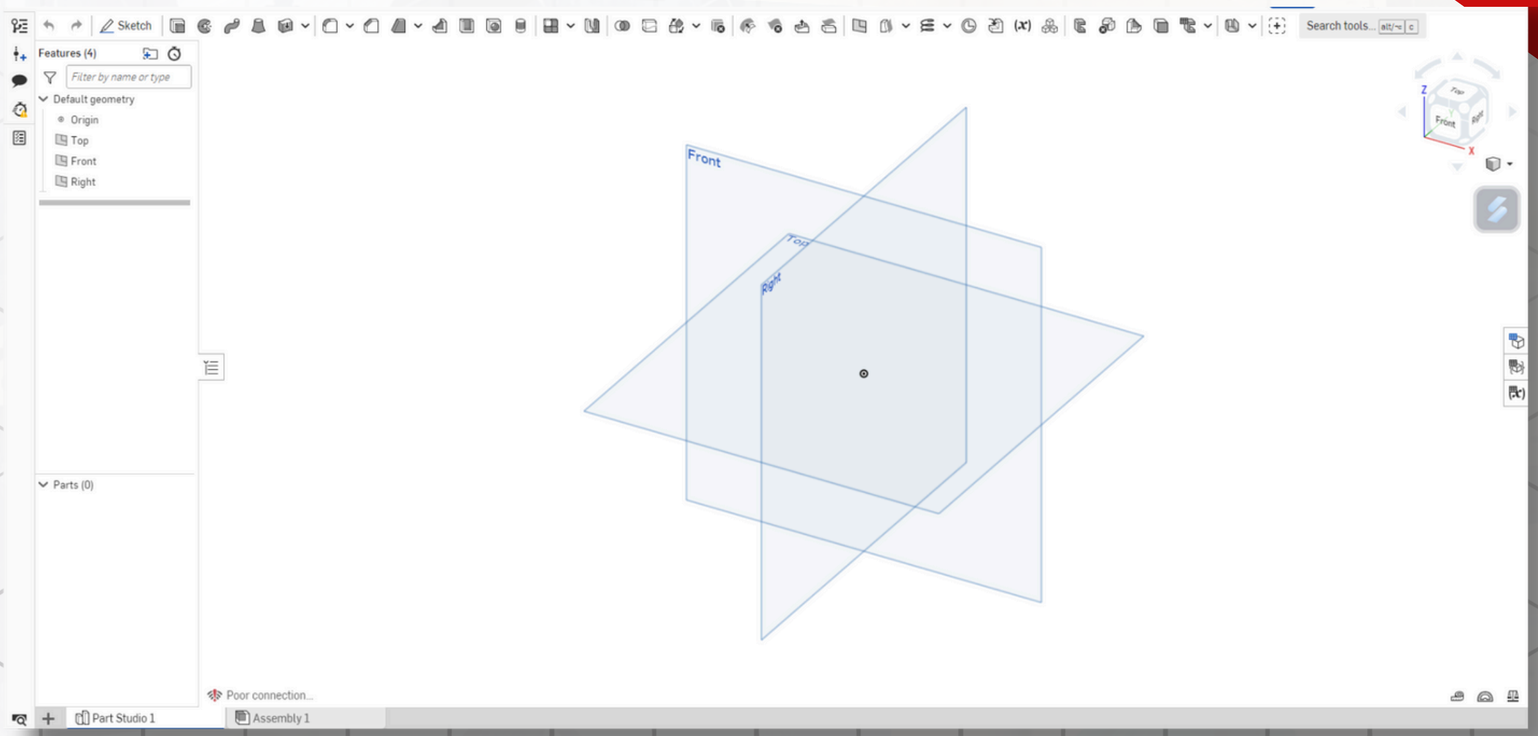

onshape®

LIKHA FABLAB

Document Toolbar

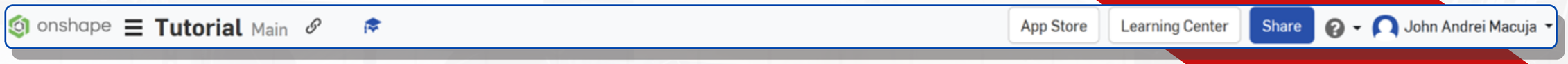

Feature Toolbar



Sketch Toolbar

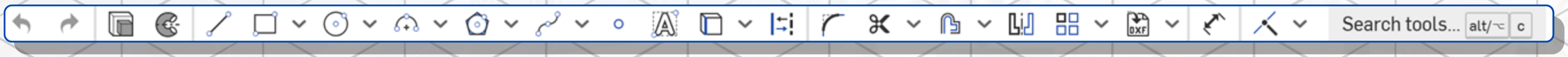

onshape®

LIKHA FABLAB

Changing Unit of Measurement

To change the units, click the three lines on the Document toolbar.

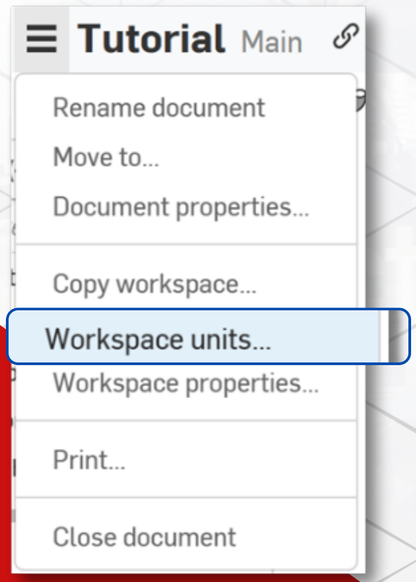

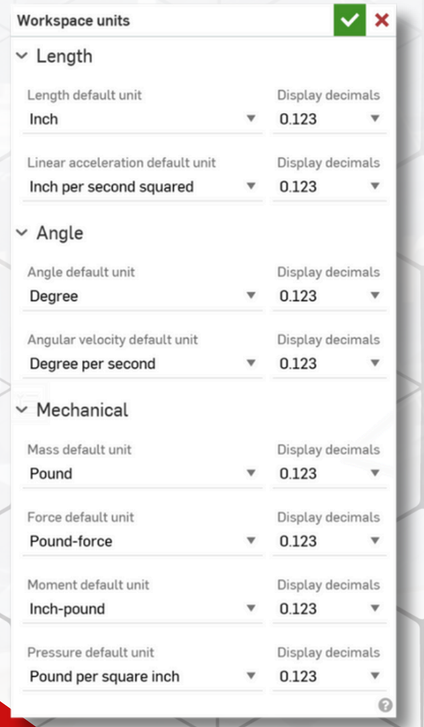

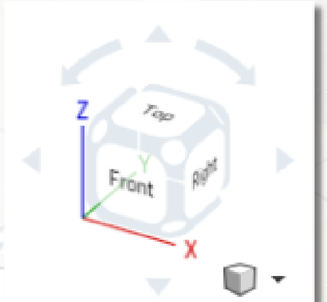

View Cube

Camera and Render options

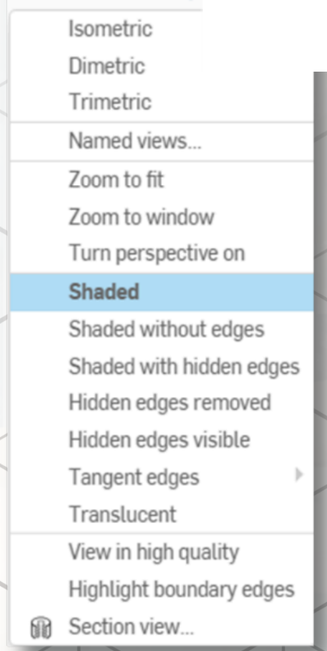

onshape®

LIKHA FABLAB

Familiarizing the Commands

shift	?	Keyboard Shortcuts
	s	Sketch
shift	e	Extrude
shift	f	Fillet
	m	Trim
	o	Offset
	d	Dimension
	b	Parallel
	e	Equal
	t	Tangent
shift	1	Front View
shift	2	Back View
shift	3	Left View
shift	4	Right View
shift	5	Top View
shift	6	Bottom View
shift	7	Isometric View
shift	8	Section View

onshape®

LIKHA FABLAB

Mouse Gestures

Windows

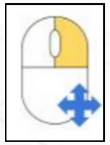

3D rotate: Right-mouse-button-click+drag

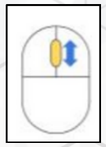

Zoom in and out: Scroll up and scroll down, respectively

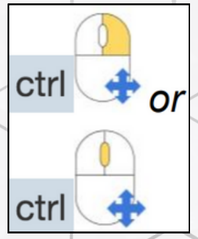

2D pan: CTRL-right-mouse-button+drag (middle button click+drag)

Apple

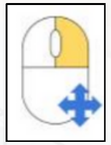

3D rotate: Right-mouse-button-click+drag

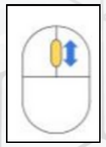

Zoom in and out: Scroll down and scroll up, respectively

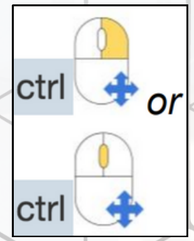

2D pan: CTRL-right-mouse-button+drag (middle button click+drag)

onshape®

LIKHA FABLAB

2D Sketches

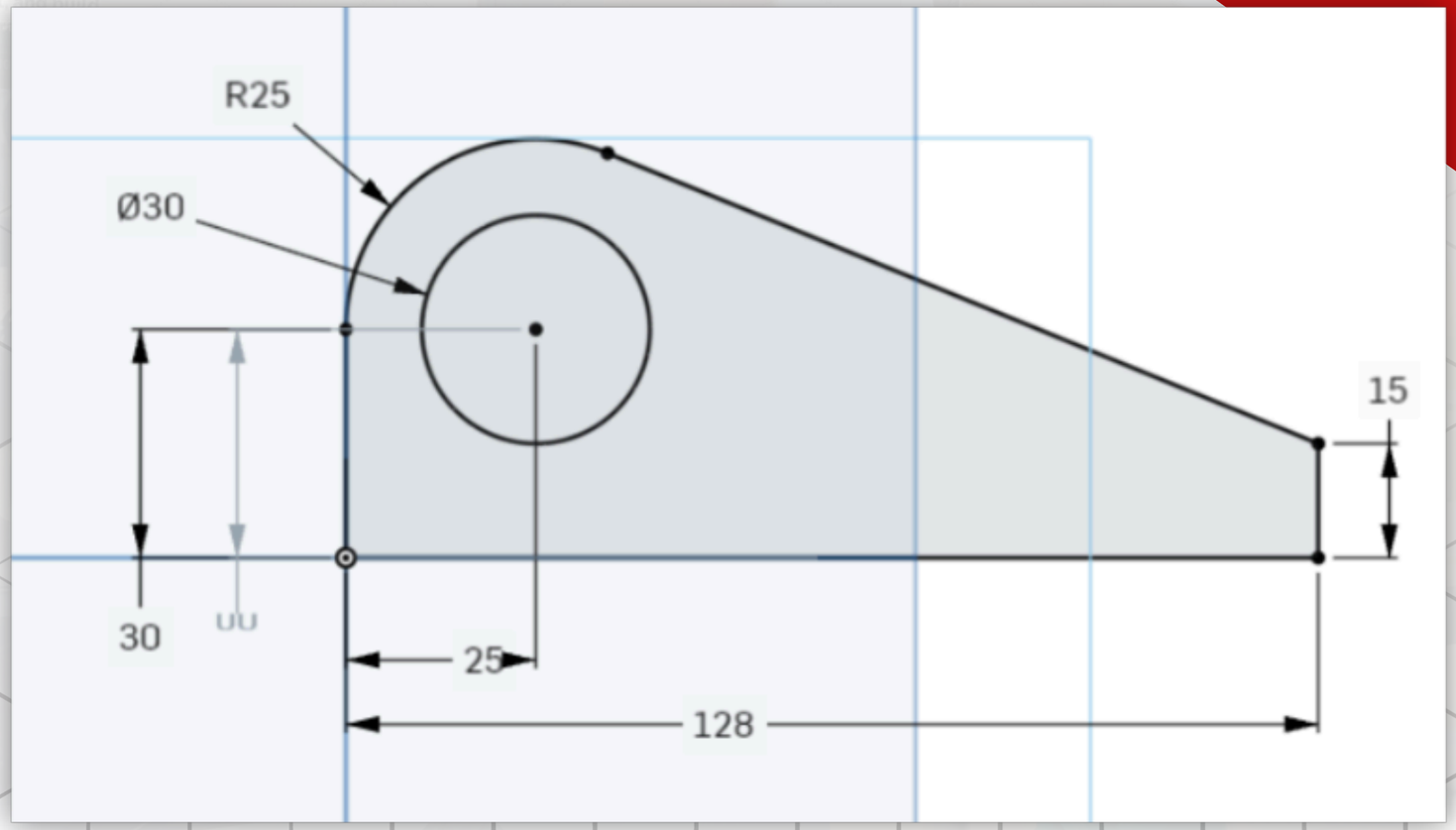

onshape®

LIKHA FABLAB

2D Sketches

We are going to recreate this design using onshape

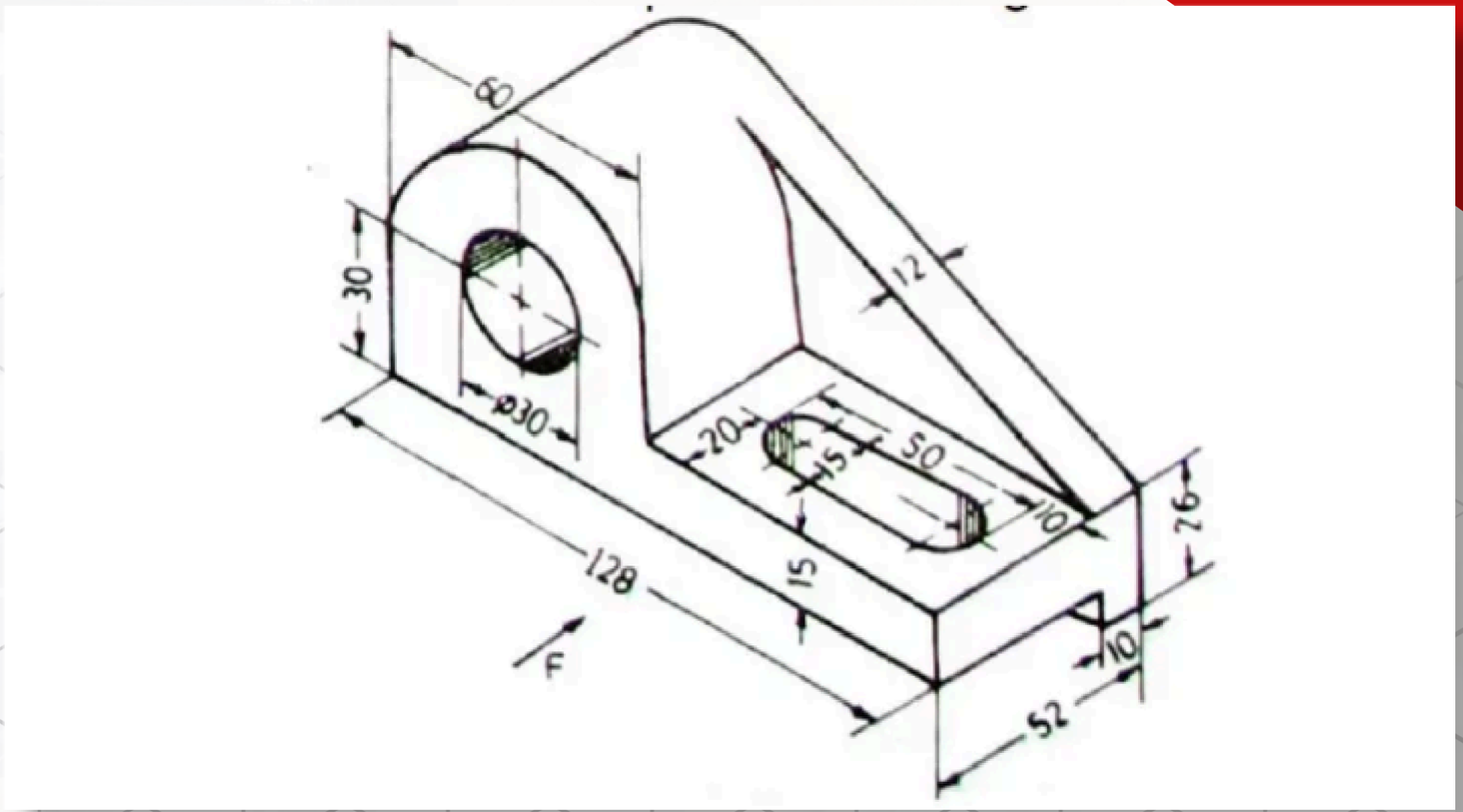

onshape

LIKHA FABLAB

In starting 2D sketching, a **plane** must be selected where the sketch would be placed. This initial planes are based on the 6 sides of the box.

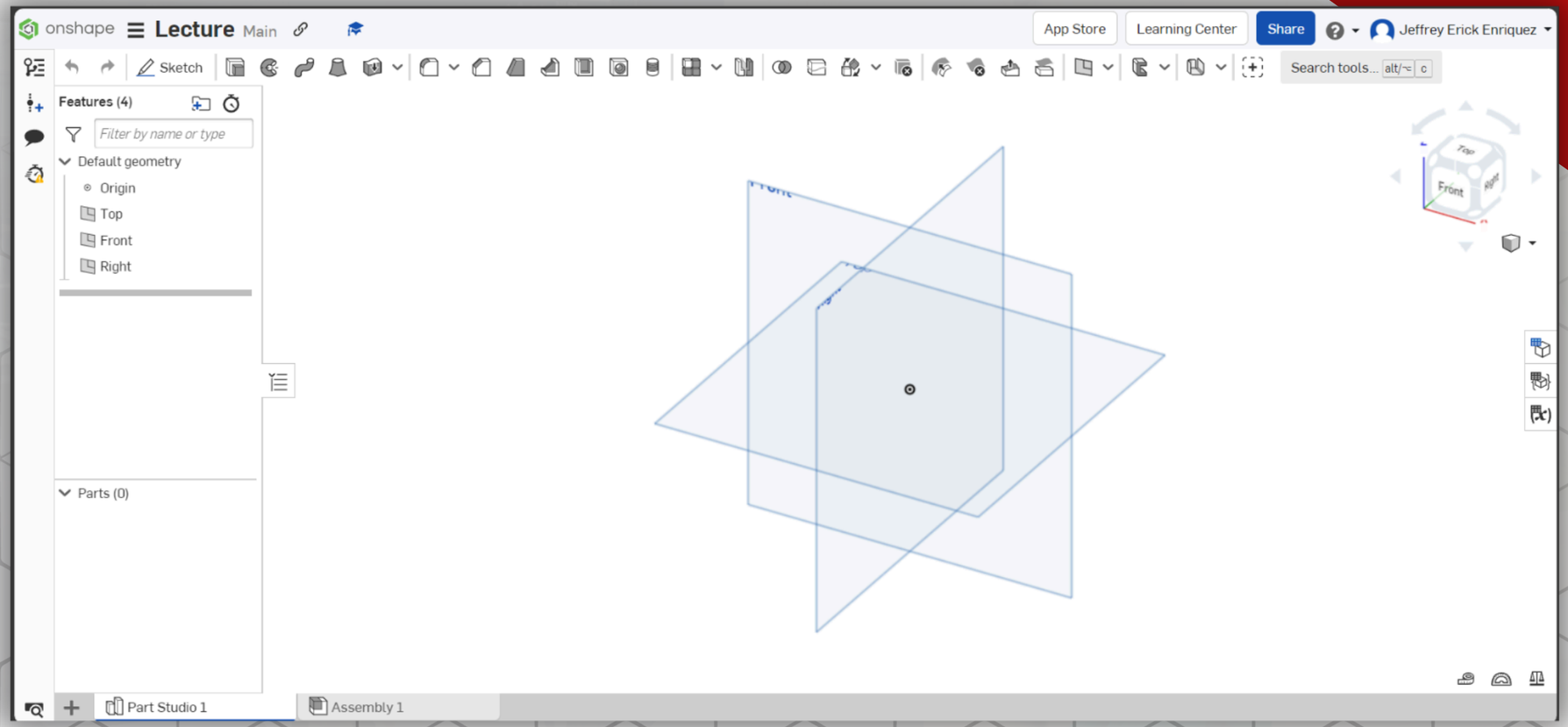

onshape

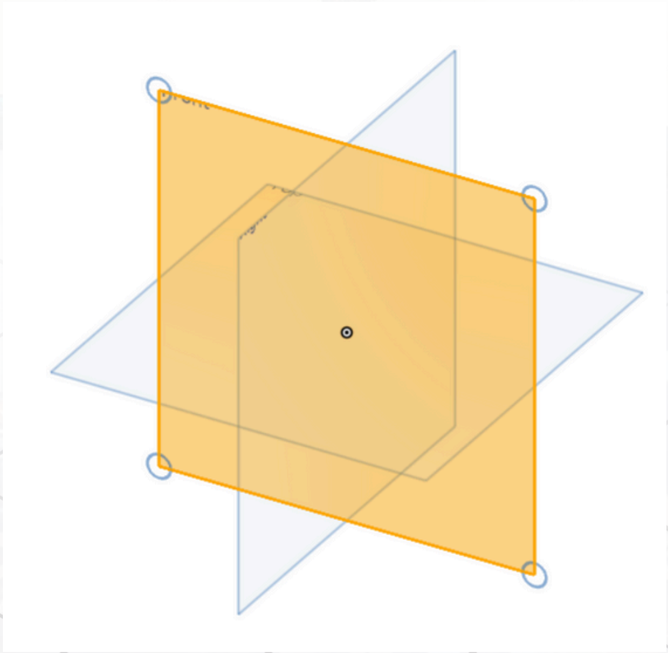

when selecting a plane, it will be colored yellow and is now selected as the main face of the sketch.

changing the orientation of the perspective or view can be done using the plane box.

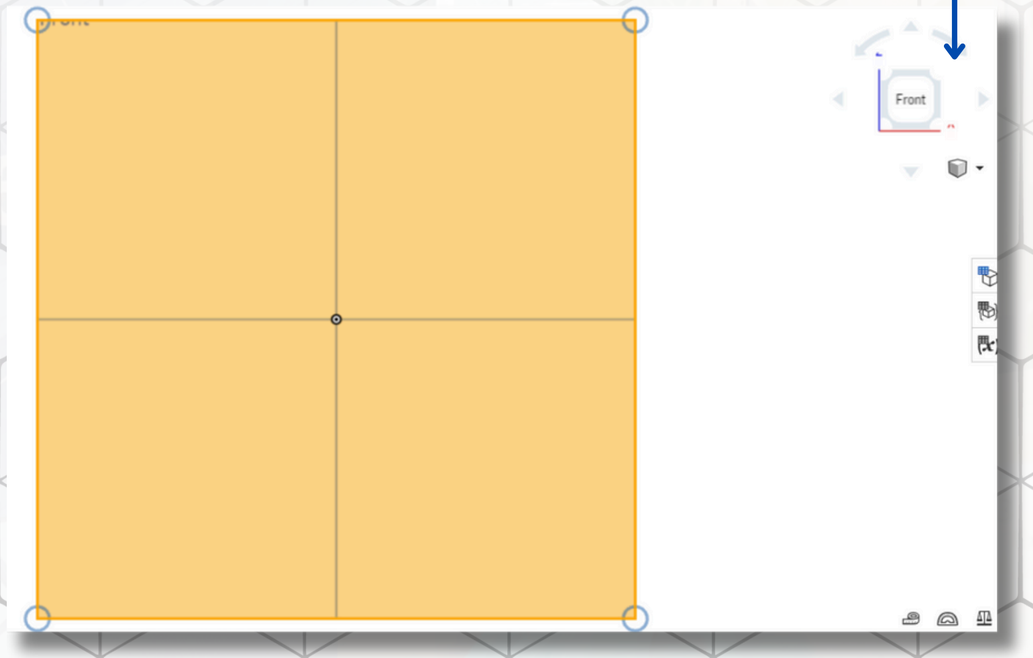

LIKHA FABLAB

Upon entering **sketch** mode, the panel will change to what is shown above.



These are the main functions in sketching. Mainly, we will be using the **line**, **circle**, **dimension**, and **constraints** button

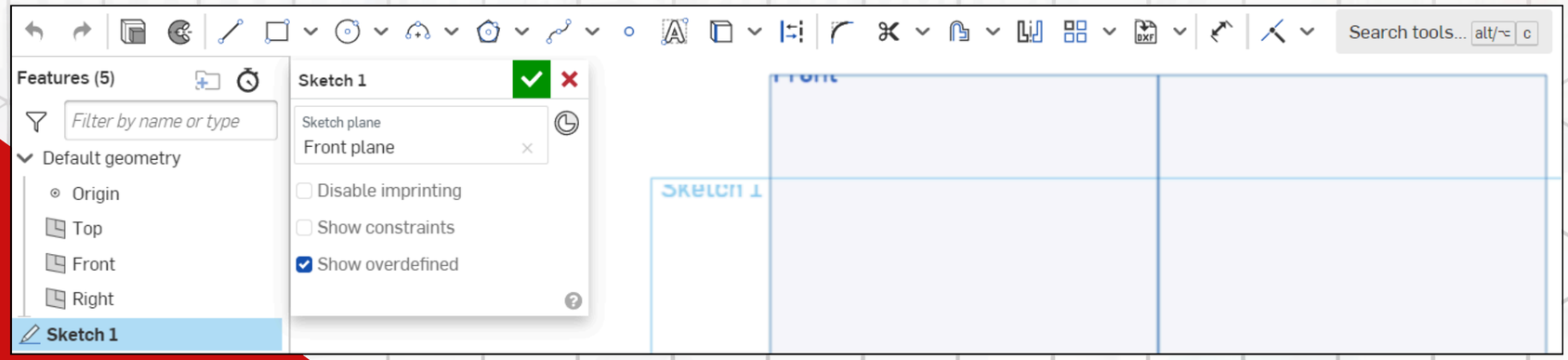

onshape®

LIKHA FABLAB

You can start by creating a rough sketch of the design using the available tools.

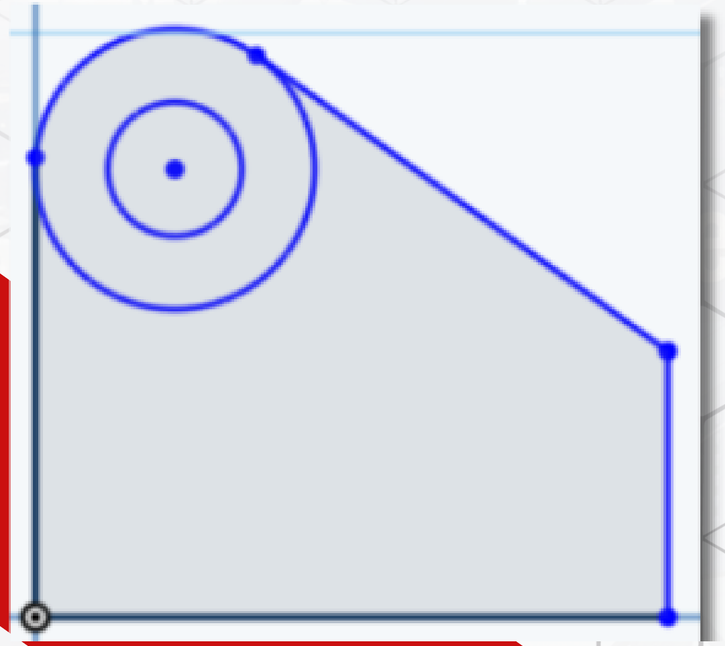

Using the **trim** function, you can trim of parts of the rough sketch that overlap or is unneccessary.

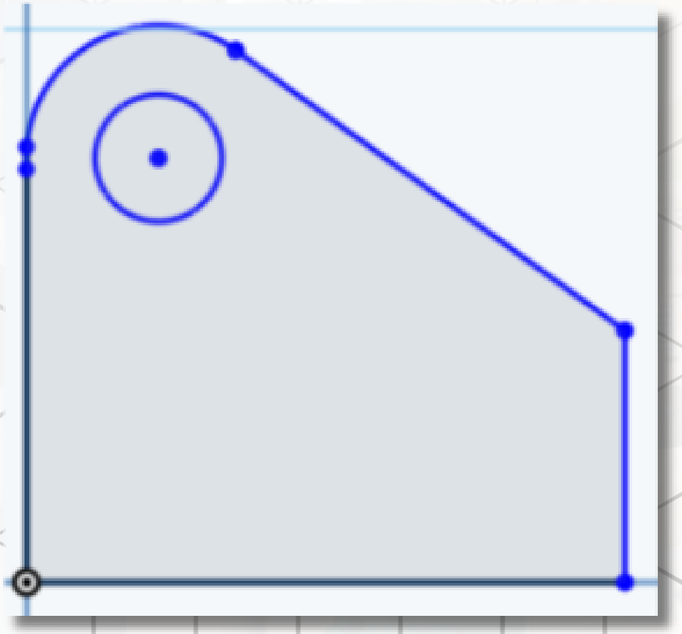

Black lines means that the sketch is **defined**, blue lines indicate **under defined**. The light-blue shade indicated solid shape.

Although not always needed, the sketch needs to be fully defined (All black).

onshape®

LIKHA FABLAB

Using the **dimension** can specify the length/radius/angle of the sketch.
Constraints can pair parts to other parts of the sketch and define a relation to each other.

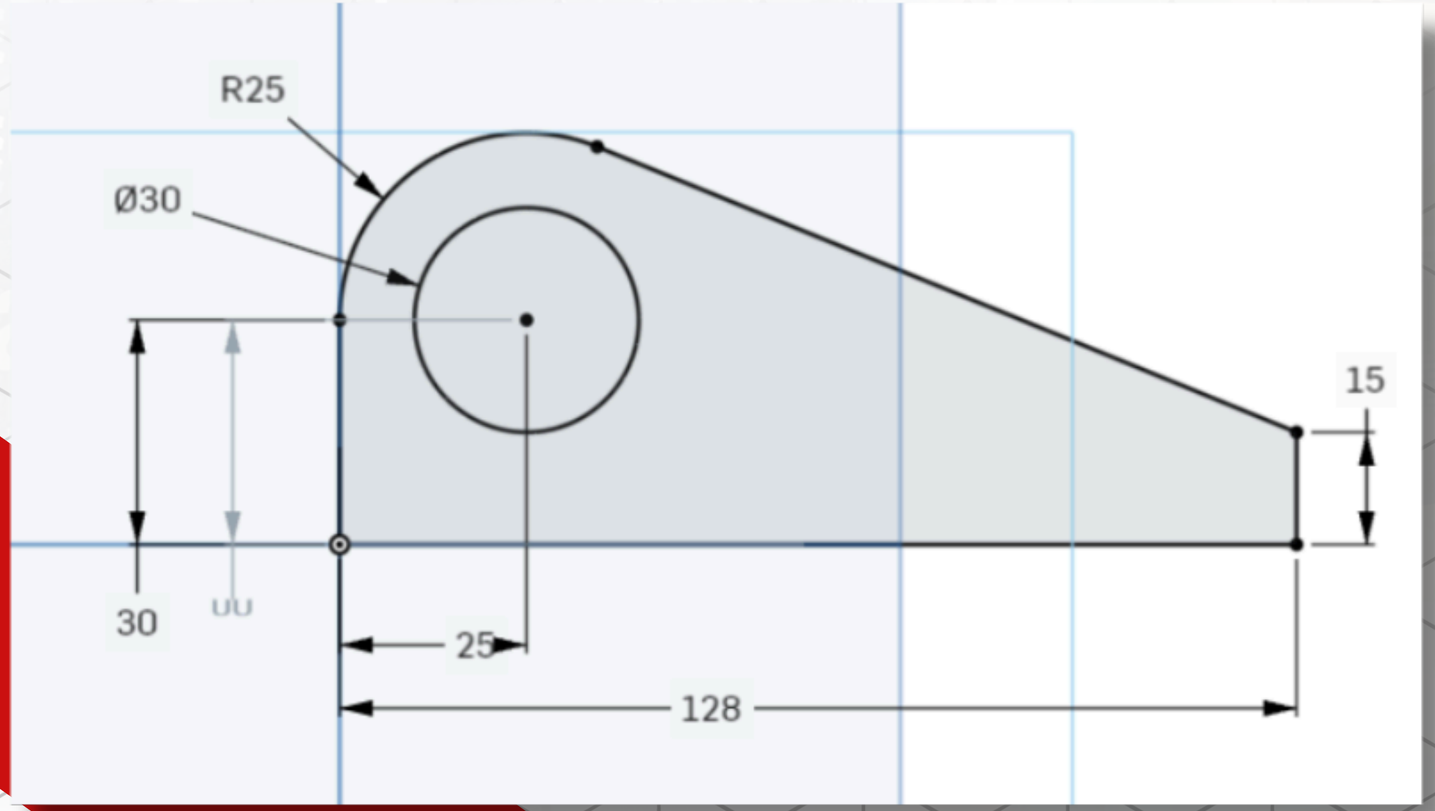

onshape

When the sketch is all black, it is already fully defined and ready to be extruded.

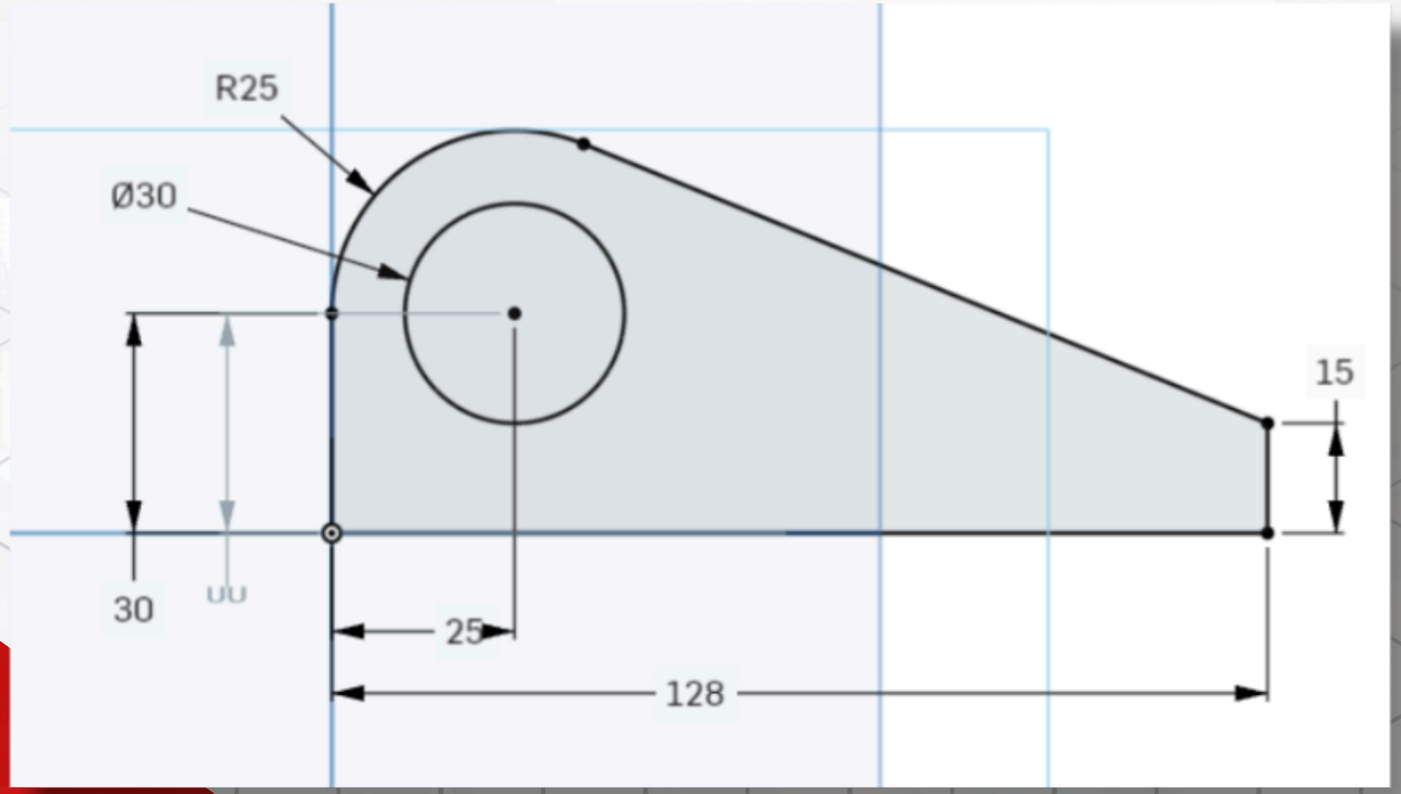

LIKHA FABLAB

BATANGAS STATE UNIVERSITY
The National Engineering University
PHILIPPINES
1903

3D

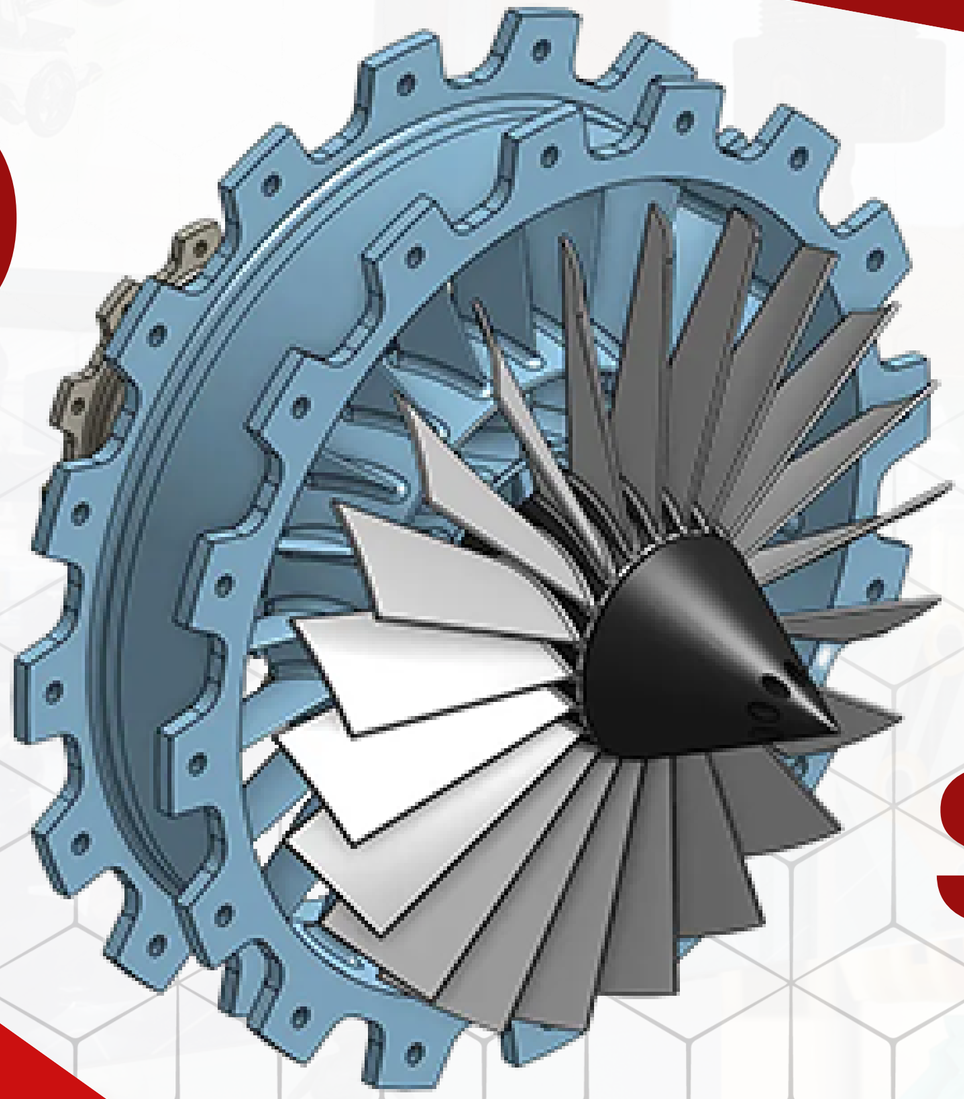

Sketches

onshape®

LIKHA FABLAB

3D Sketches

When your sketch is done, it can now be extruded to create a 3D model.

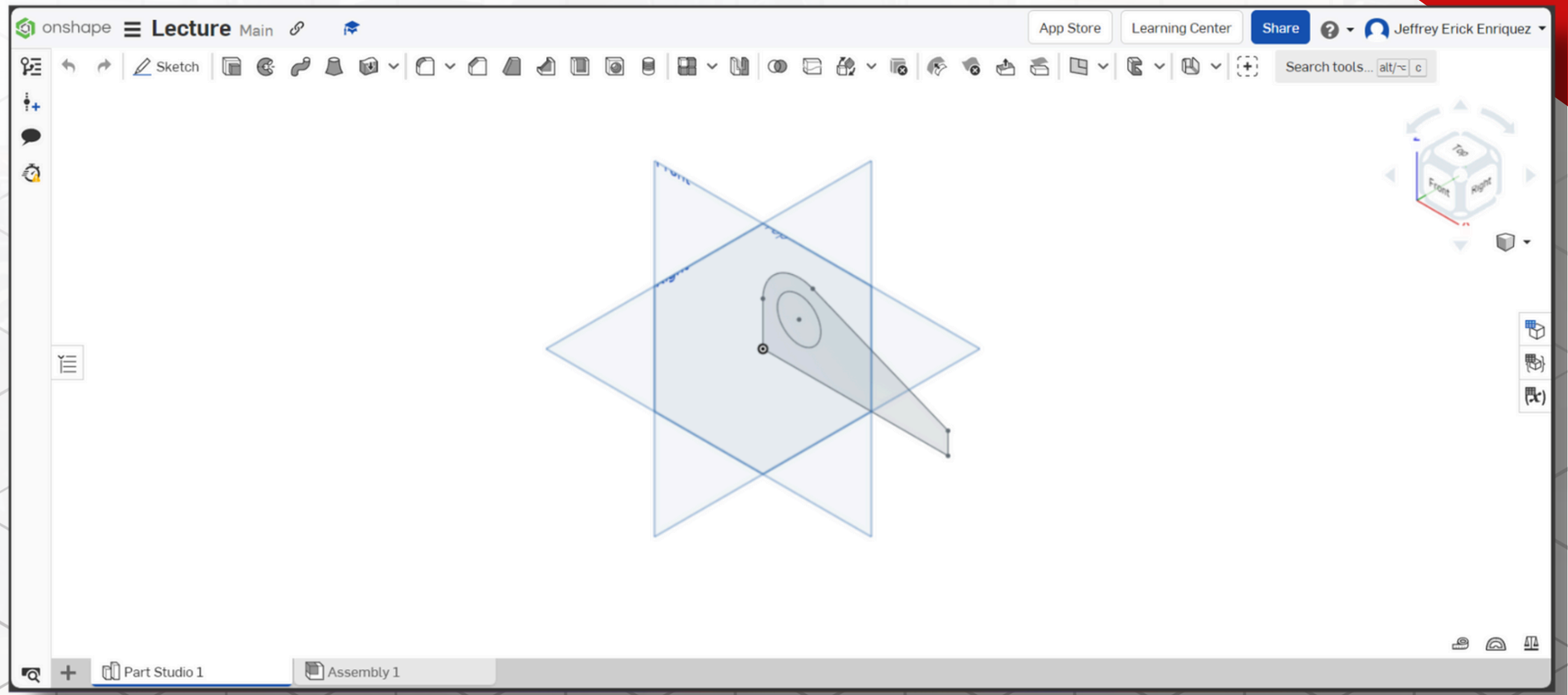

onshape

LIKHA FABLAB

3D Sketches

To extrude, you must click the extrude function in the toolbar, then select the solid plane which will be extruded.

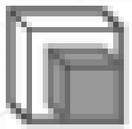

Extrude

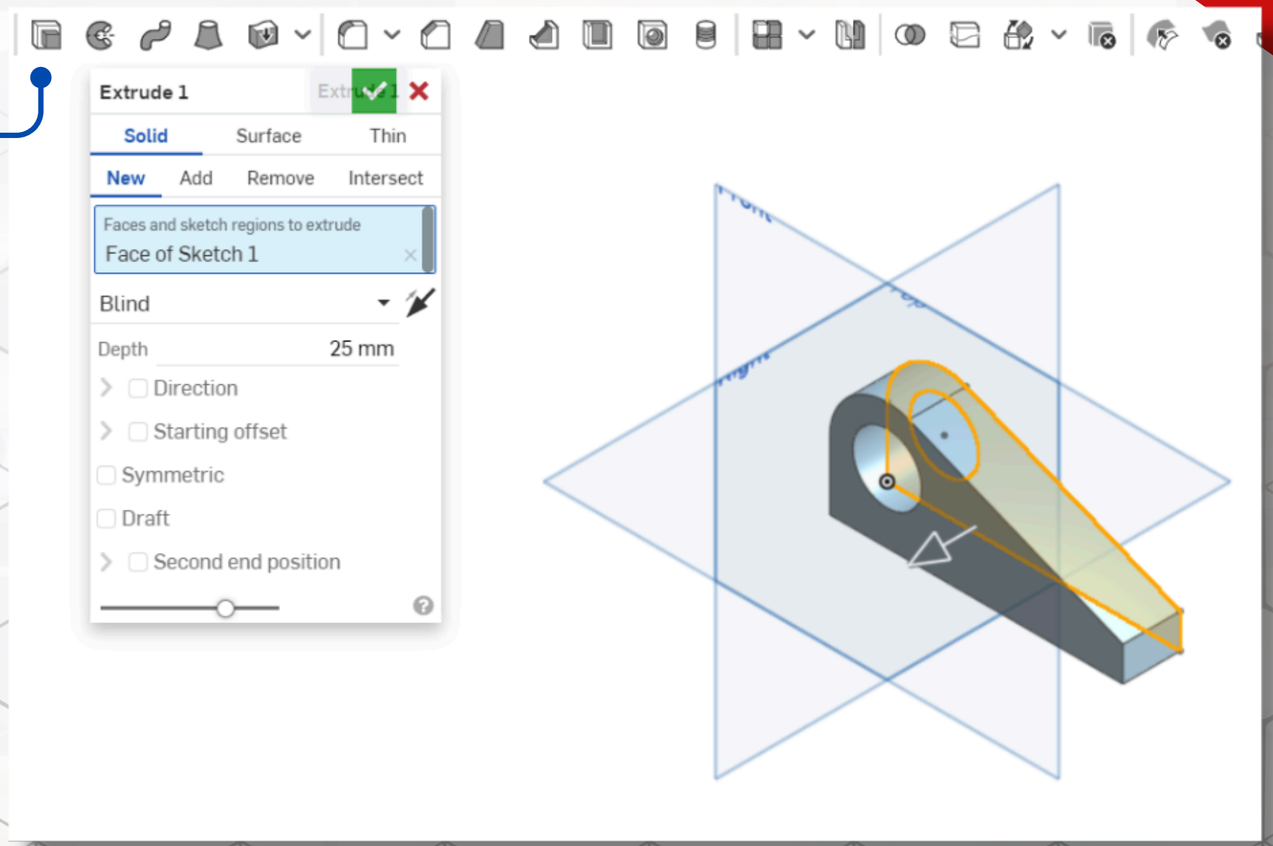

onshape®

LIKHA FABLAB

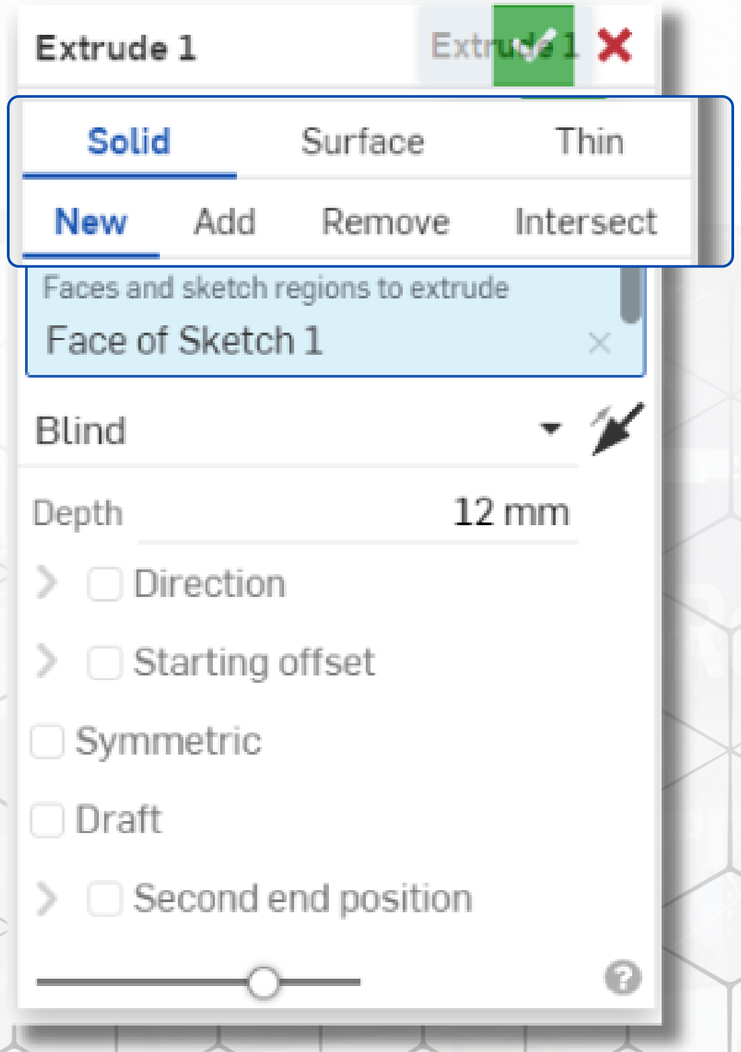

The extrude dialog shows upon selecting the button. Firstly, we will be focusing on the Solid Extrusion

- **New** - Creates a new model, not connected to any previous model.
- **Add** - Adds the new extrusion to any previous model it overlaps.
- **Remove** - Removes all parts of the model that intersects to the current extrusion.
- **Intersect** - Only retains parts of the model that intersects with the current model.

onshape

LIKHA FABLAB

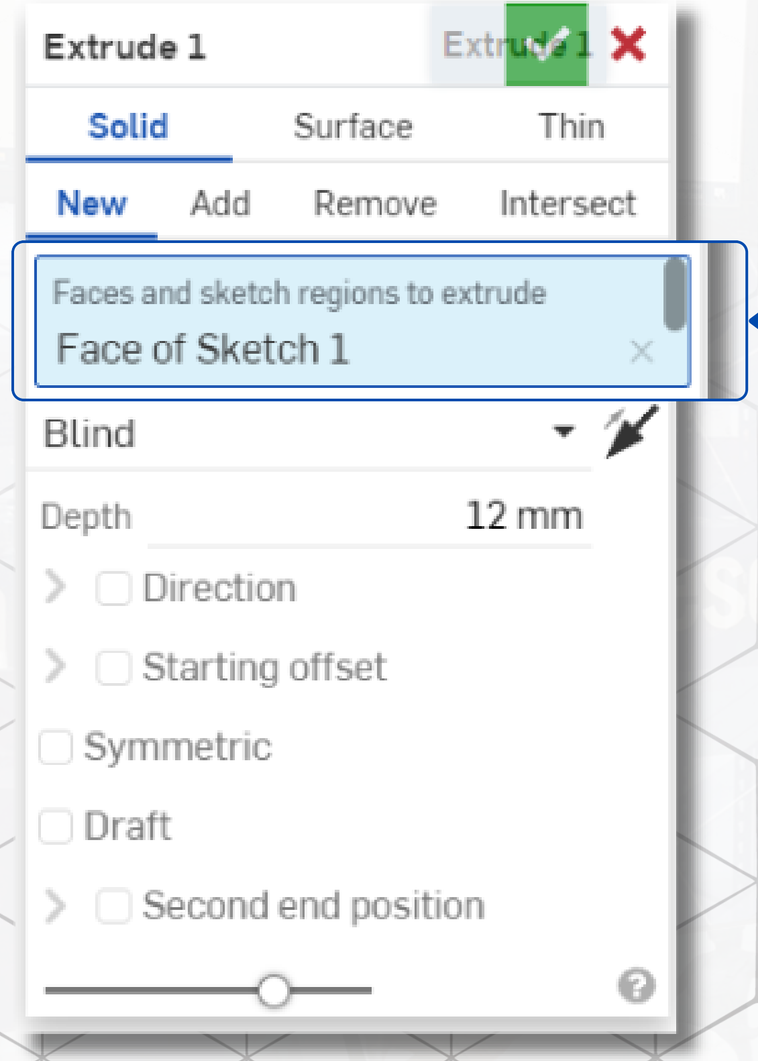

This part is the selection of faces which will be extruded

onshape

LIKHA FABLAB

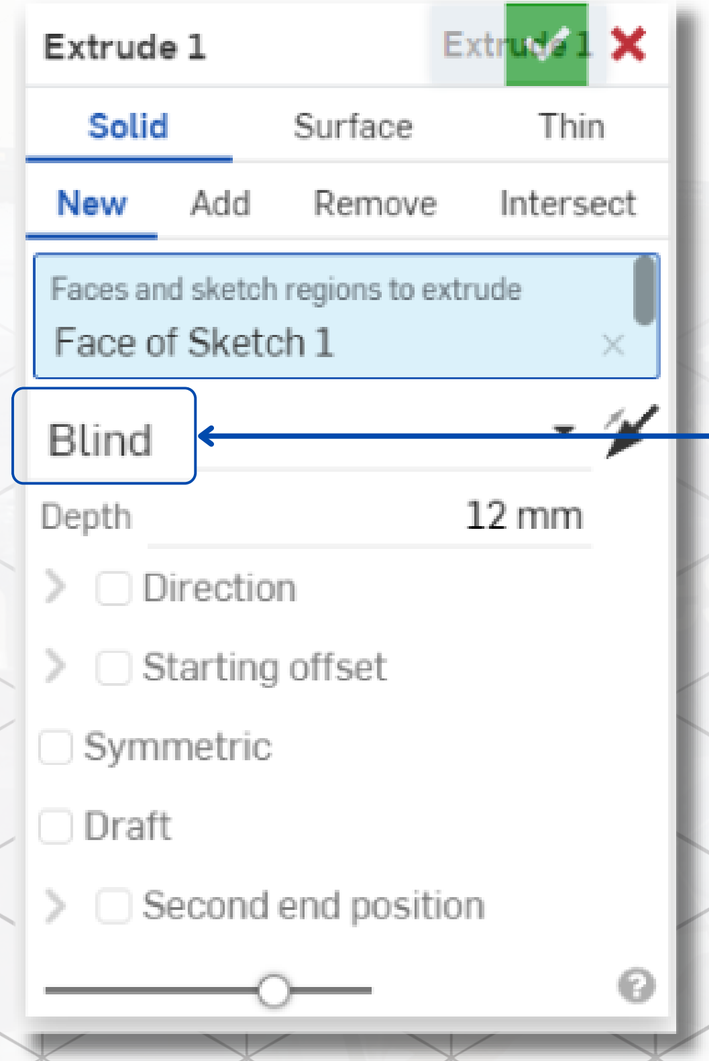

This part (End Type) dictates how the model will be extruded

- Blind - disregarded, based on depth
- Up to next
- Up to face
- Up to part
- Through all - upto the last part

onshape

LIKHA FABLAB

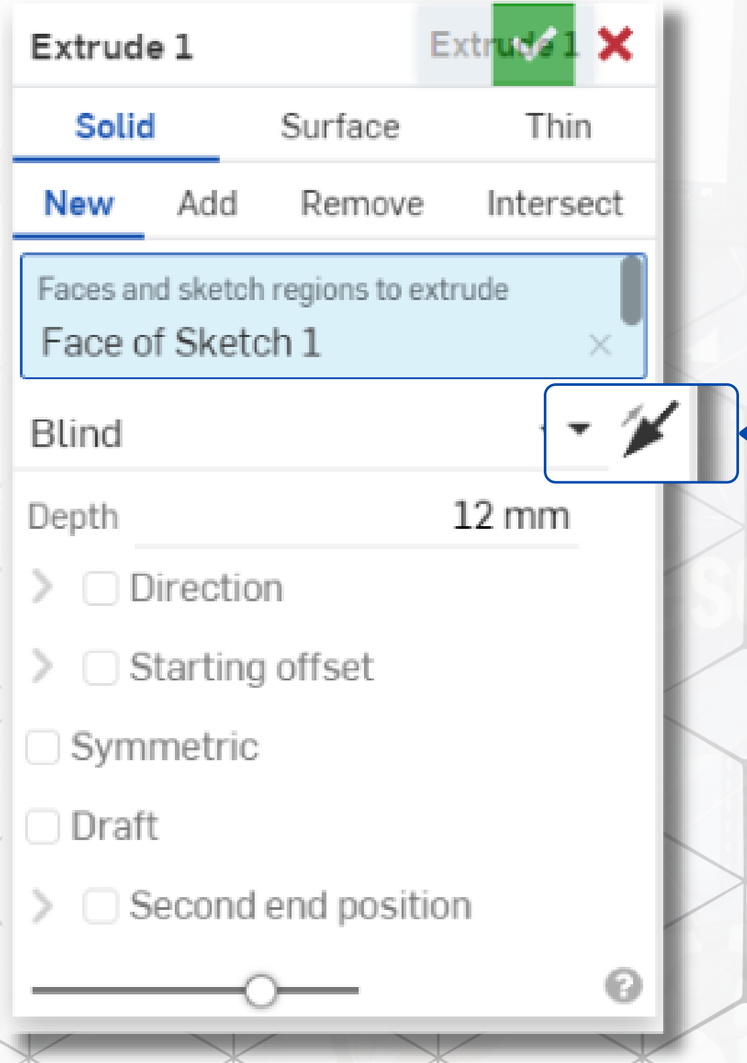

This is the direction of the extrusion, which indicates the direction where the extrusion will happen in comparison to the selected face.

onshape

LIKHA FABLAB

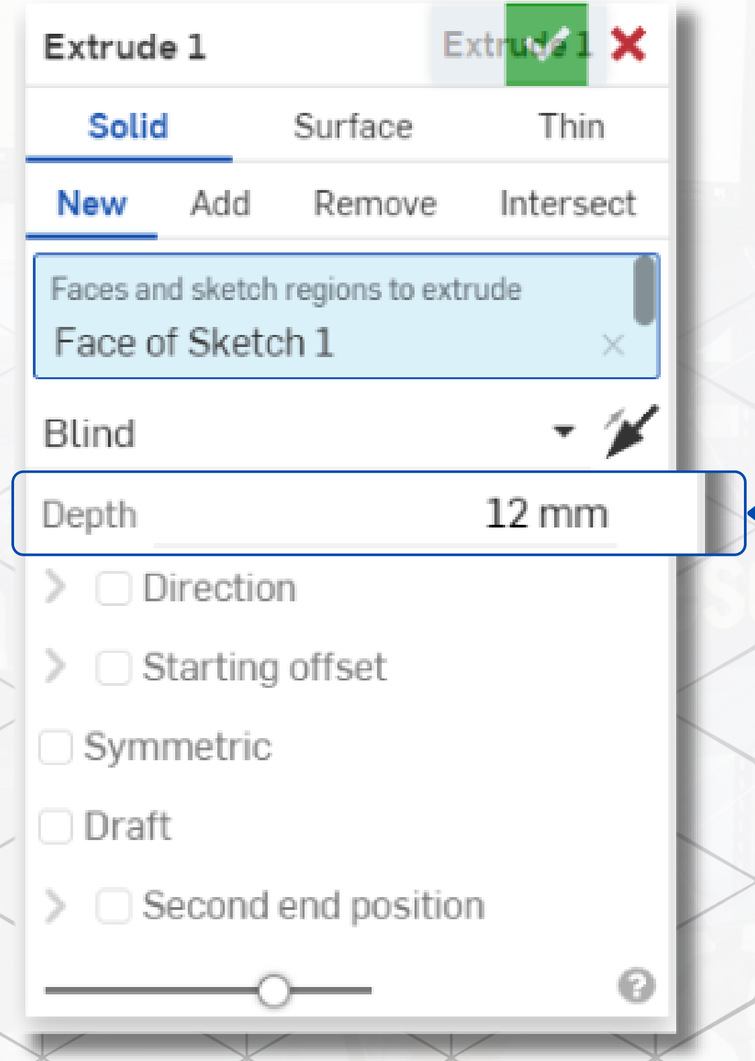

The depth indicates how long the extrusion will be, used in ‘blind’ end type.

onshape®

LIKHA FABLAB

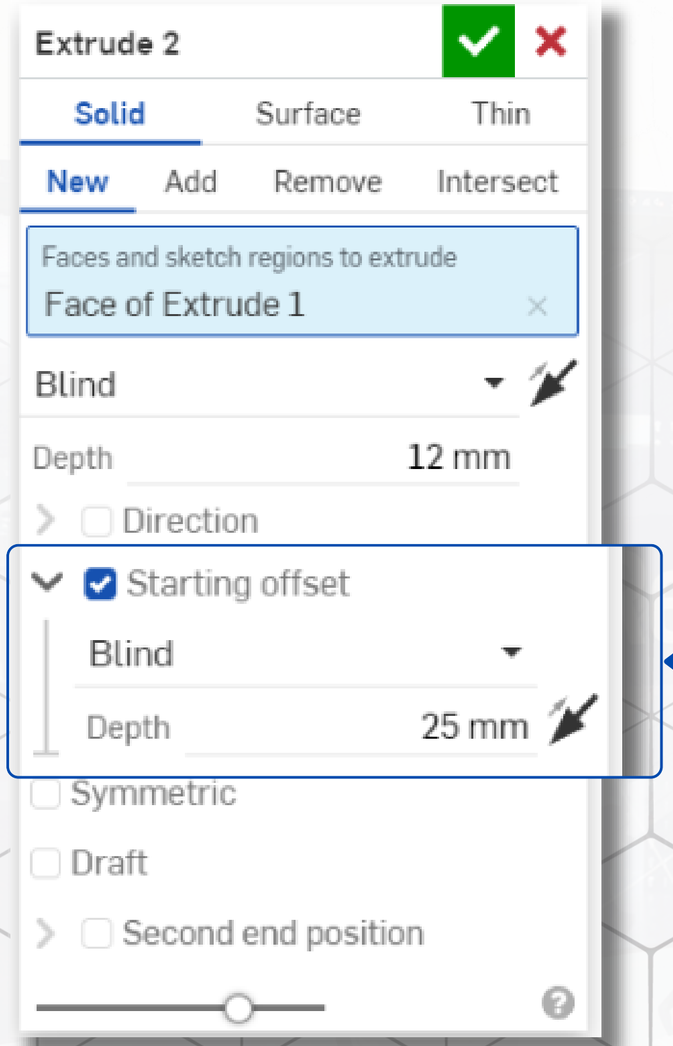

Starting offset dictates how far will the extrusion will happen from the reference sketch

onshape®

LIKHA FABLAB

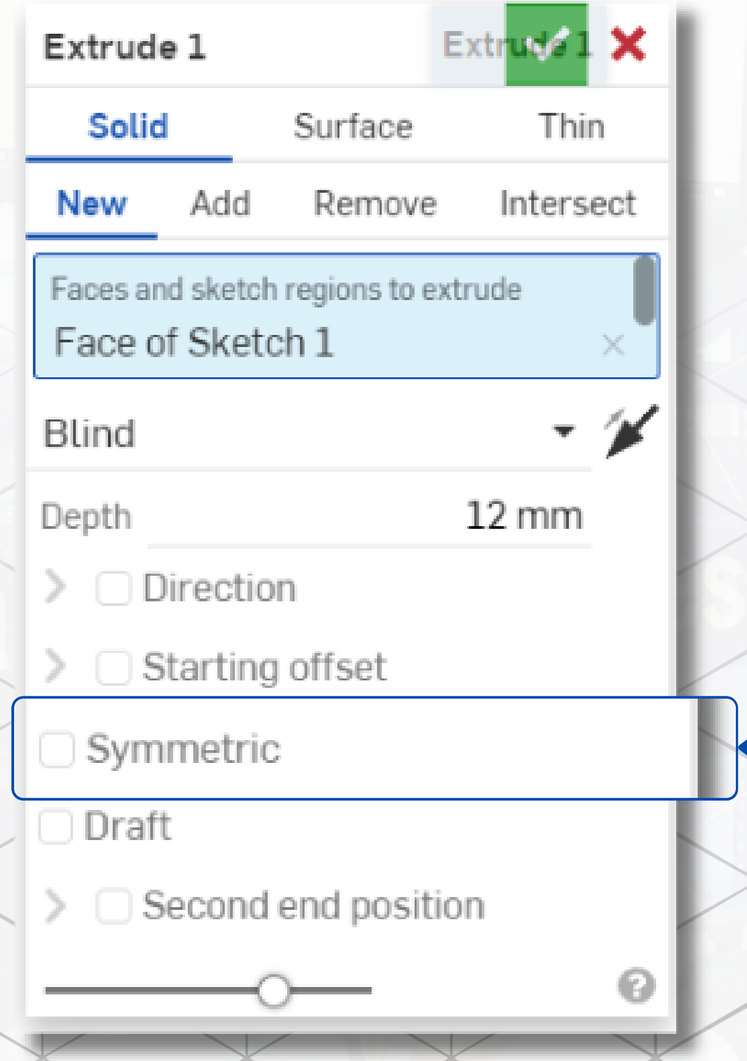

The Symmetric button allows a mirrored symmetry , with the depth being its total length.

onshape

LIKHA FABLAB

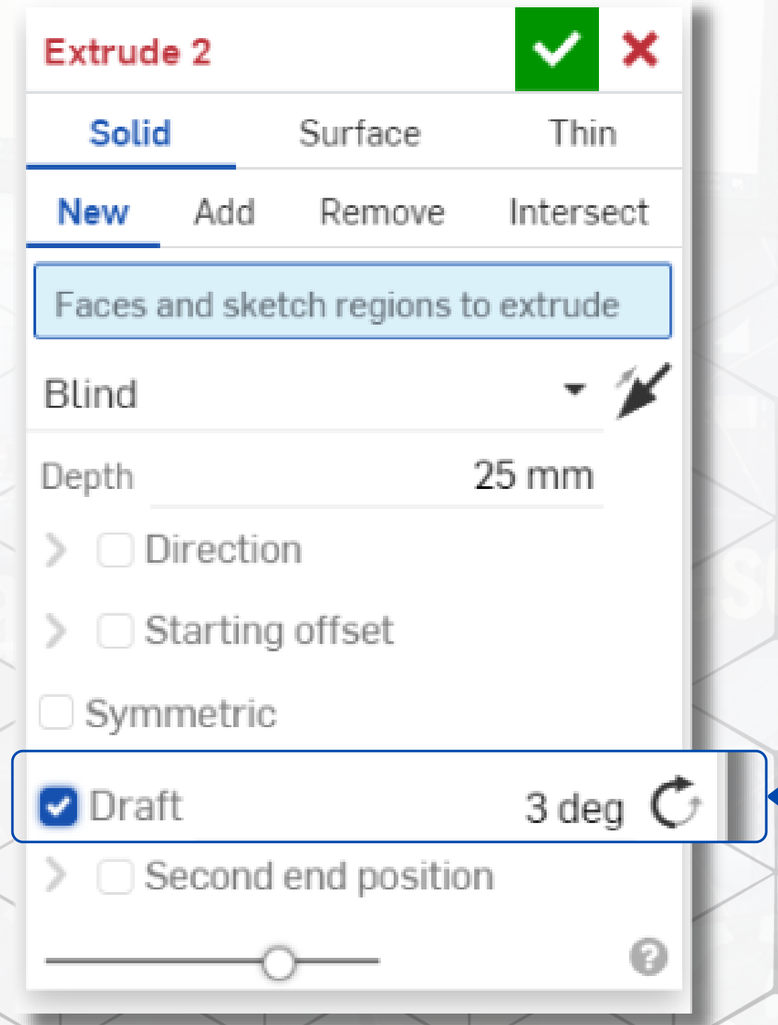

The Draft button causes a angled retraction / expansion of the extrusion

onshape®

LIKHA FABLAB

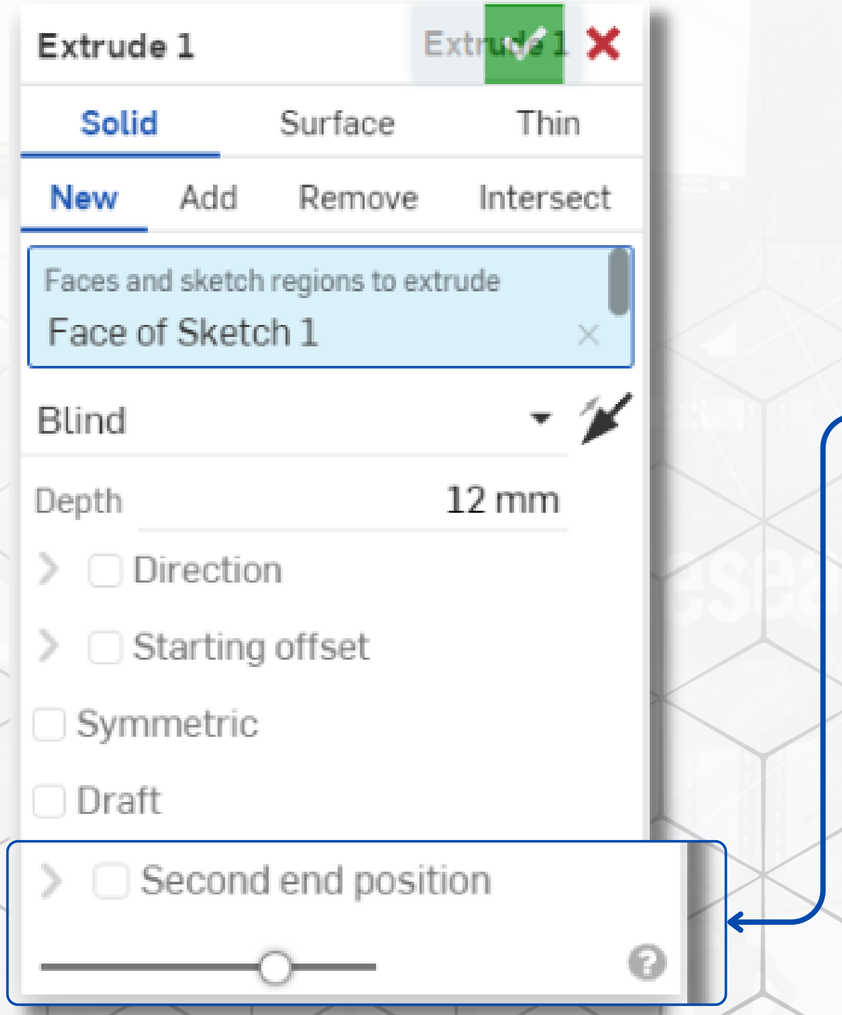

When you want to add an extrusion to the other side of the face, the second end position can the enabled to do so.

onshape

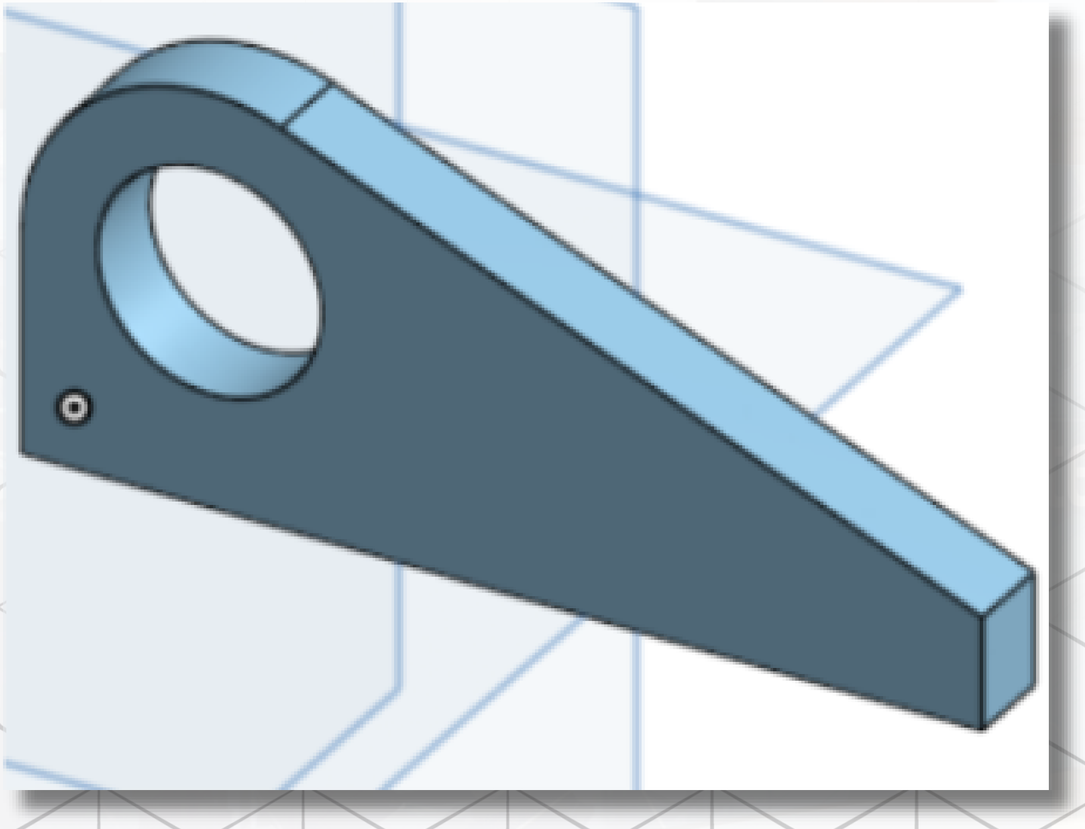

Upon entering, the
extrusion is now finished

LIKHA FABLAB

Multiple Sketches and Modeling

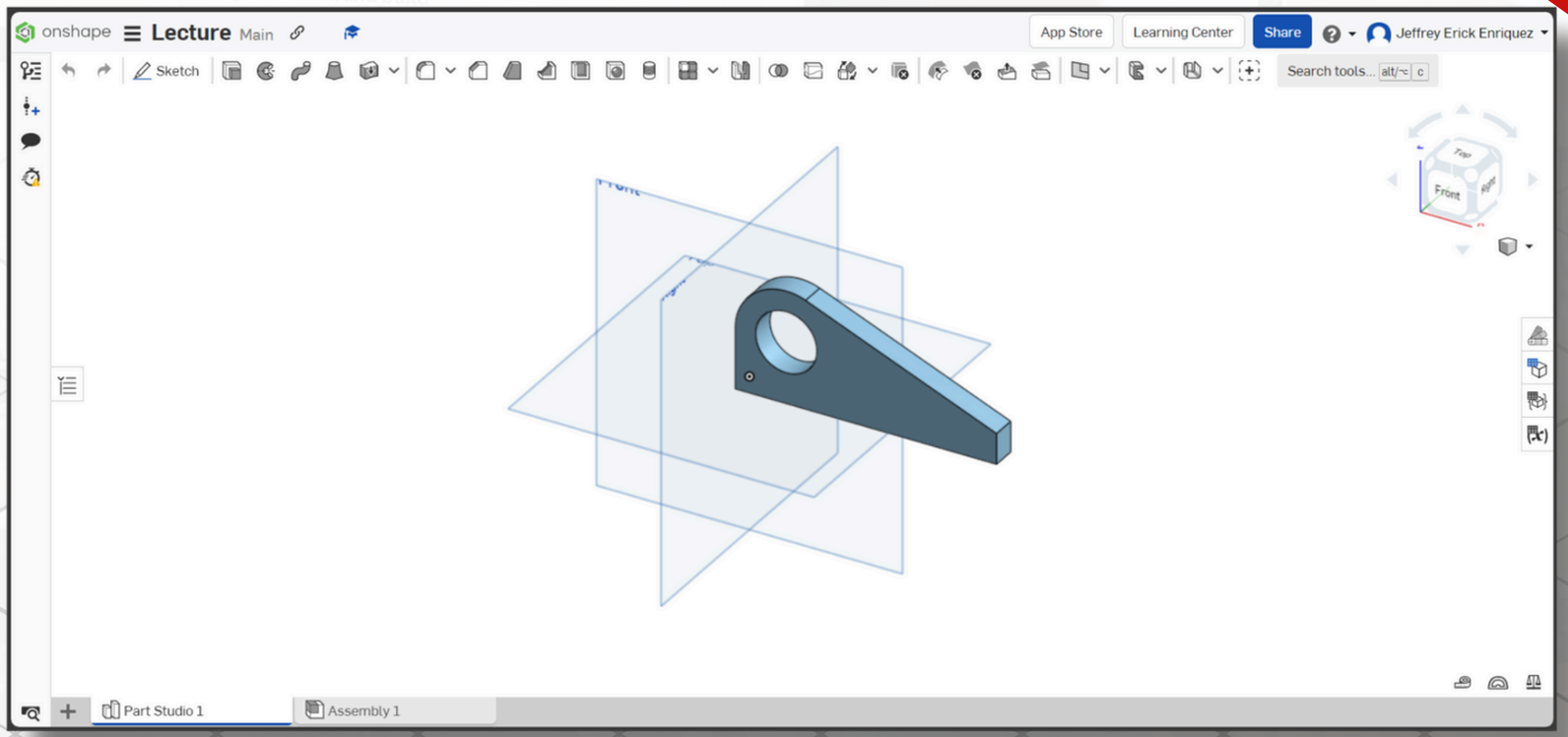

Similarly to starting a sketch, new sketches in an existing model can be done in one of its faces or planes.

onshape®

LIKHA FABLAB

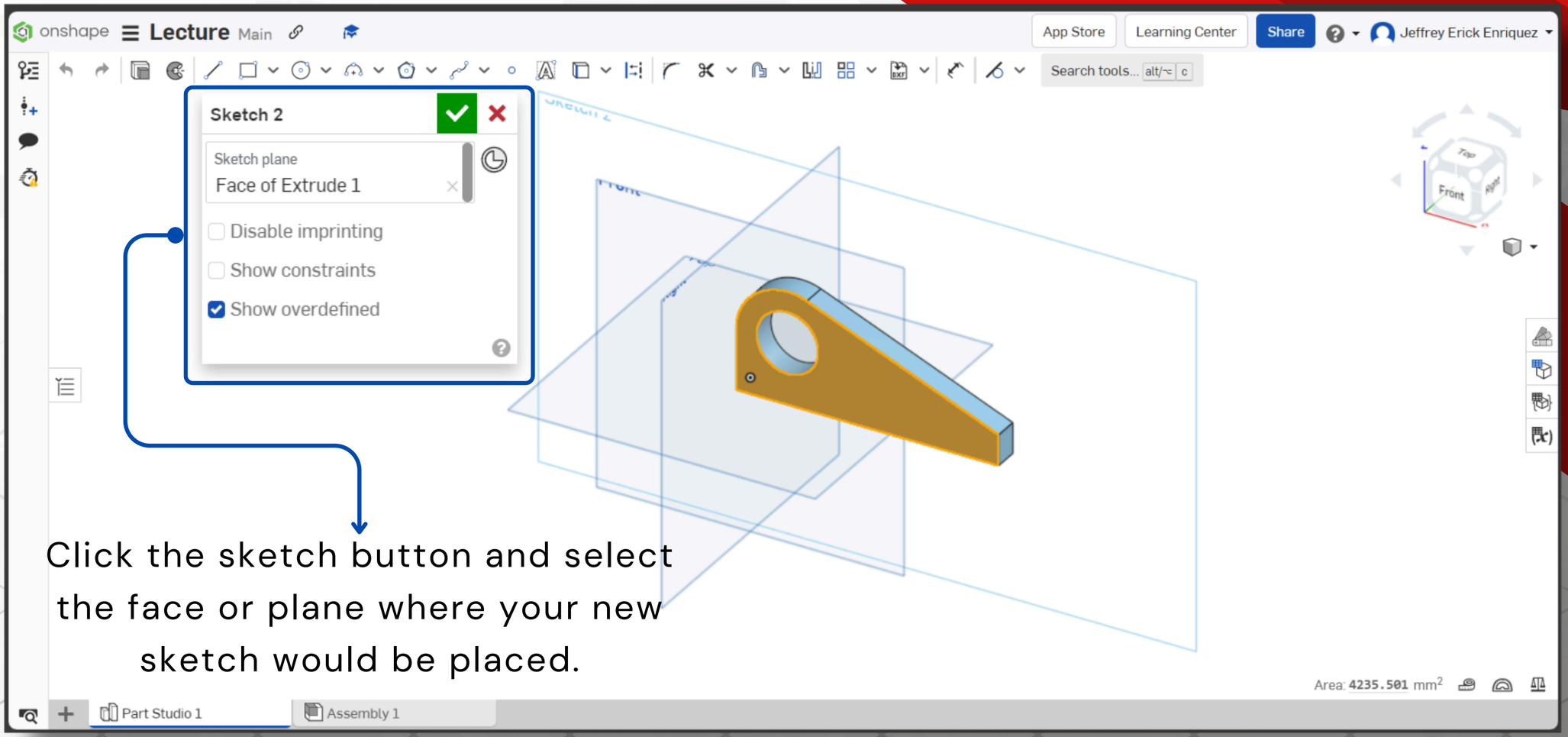

Click the sketch button and select the face or plane where your new sketch would be placed.

onshape

LIKHA FABLAB

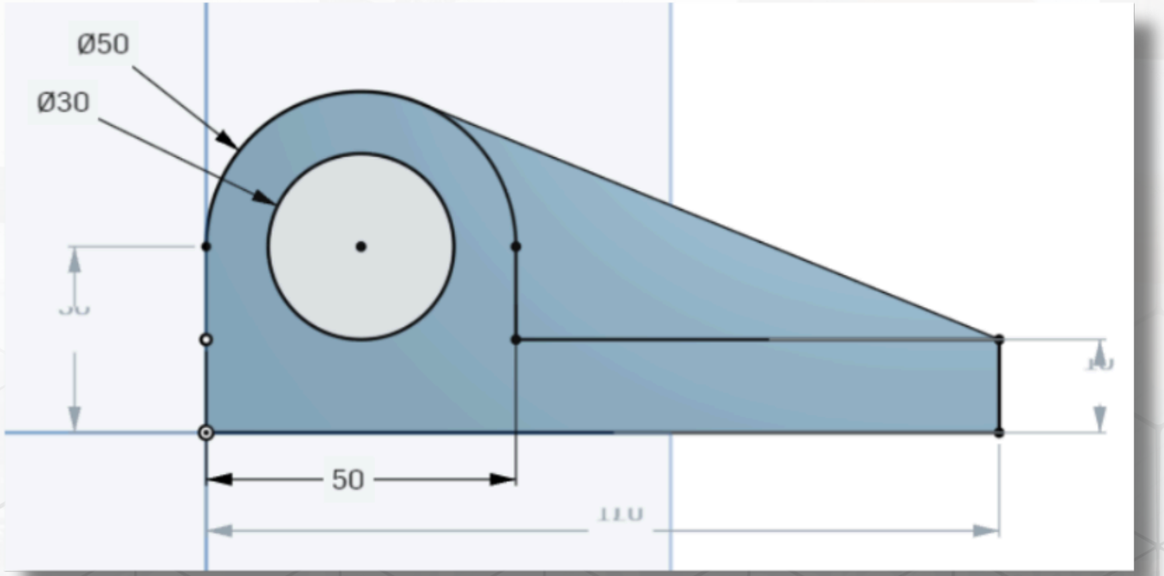

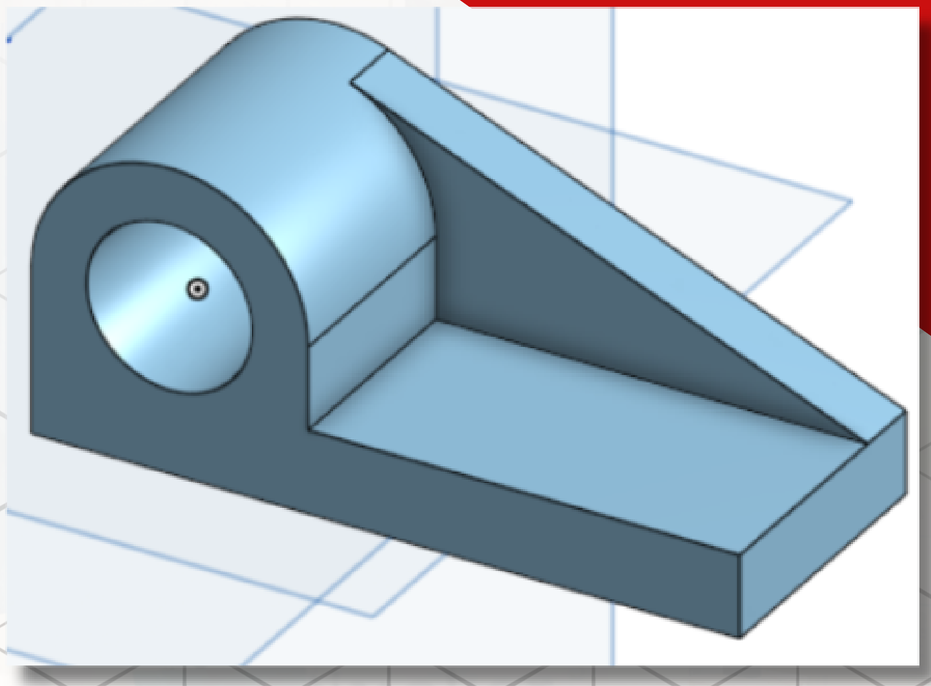

Make sure that the extrusion is set to add rather than new

onshape®

LIKHA FABLAB

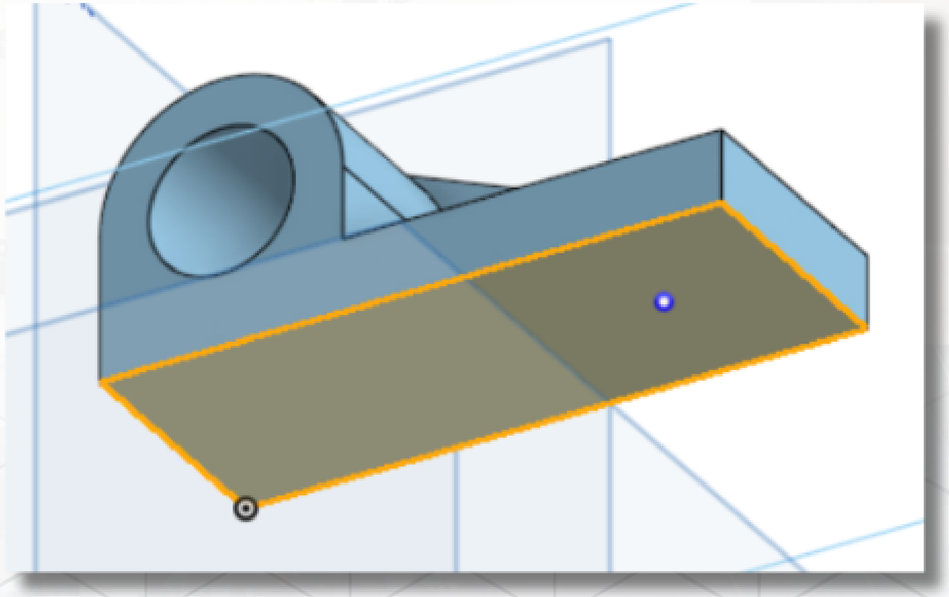

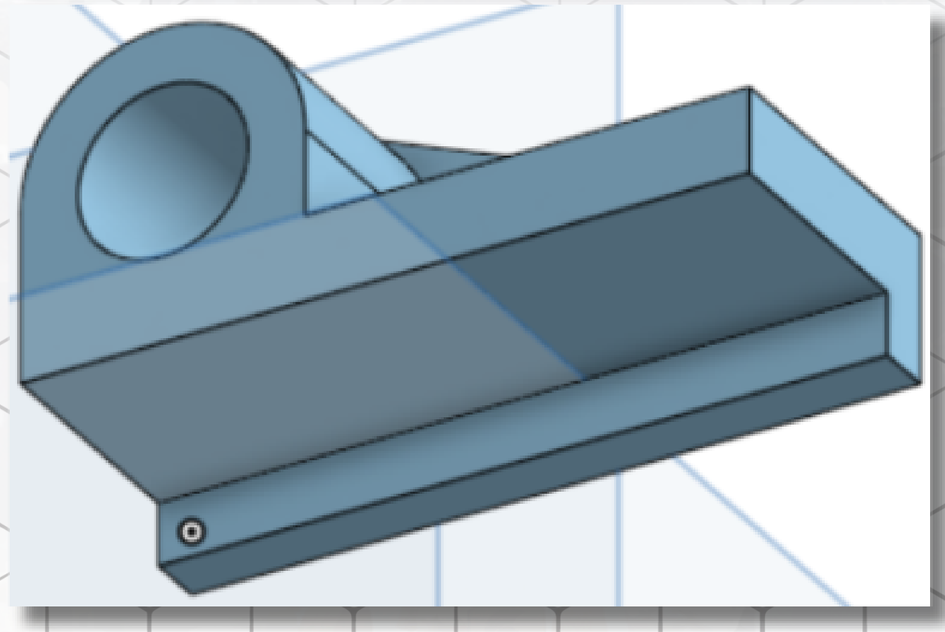

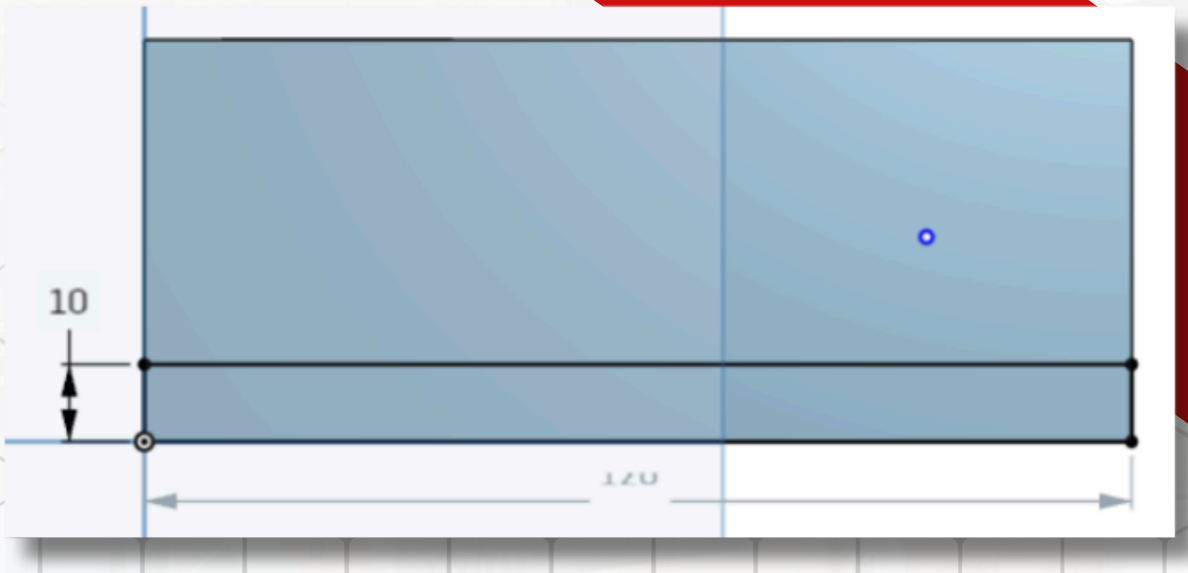

onshape

LIKHA FABLAB

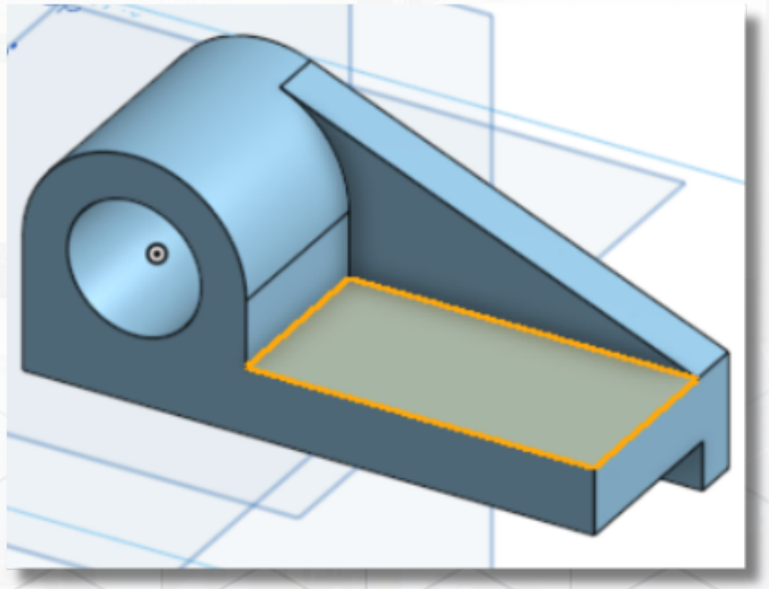

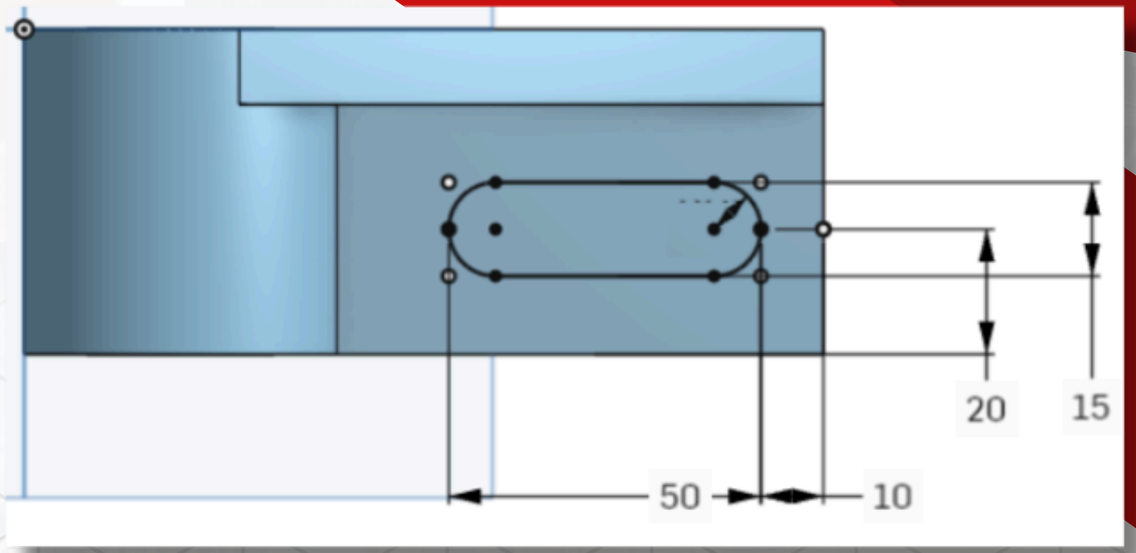

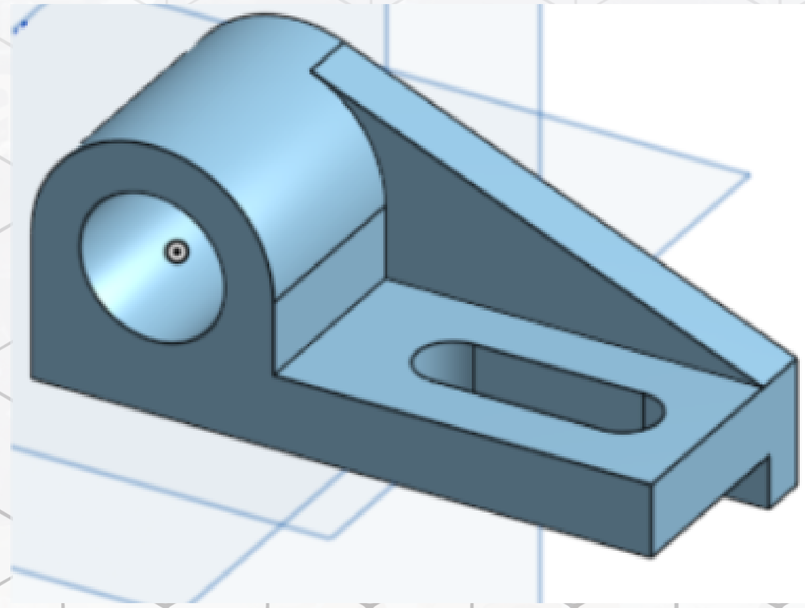

Make sure to set extrusion to remove to create holes using your sketch

onshape

LIKHA FABLAB

BATANGAS STATE UNIVERSITY
The National Engineering University
PHILIPPINES

Comparison of Guide to Actual

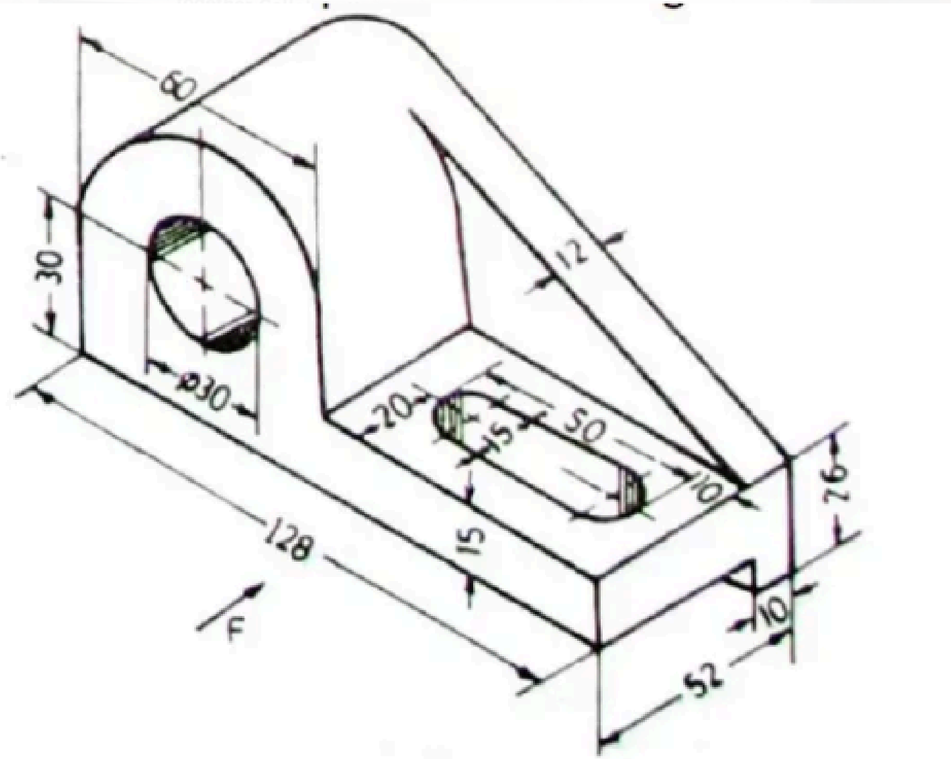

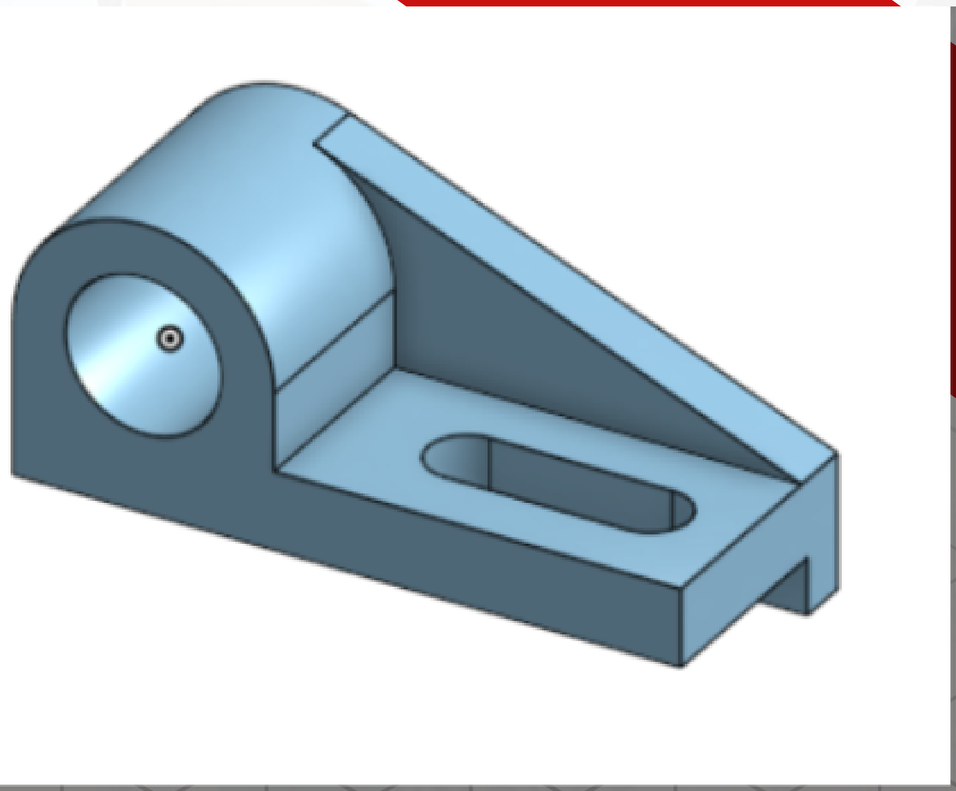

onshape

LIKHA FABLAB

BATANGAS STATE UNIVERSITY
The National Engineering University
PHILIPPINES

MULTIPLE SKETCHES AND MODELLING

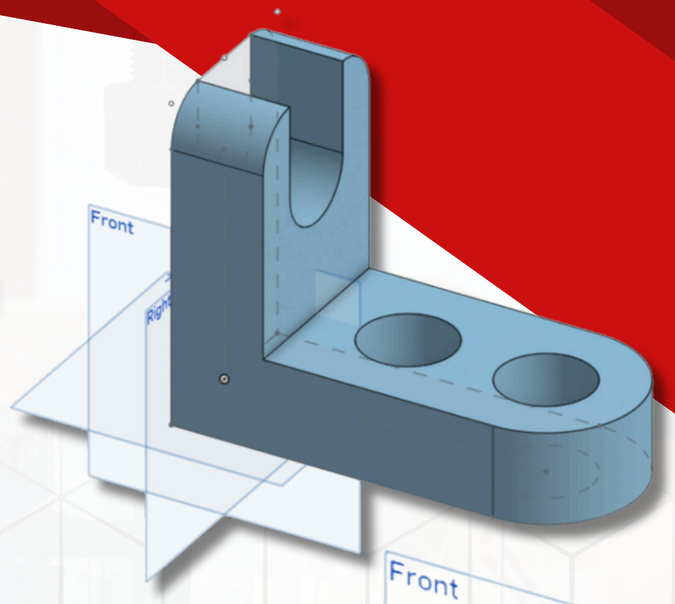

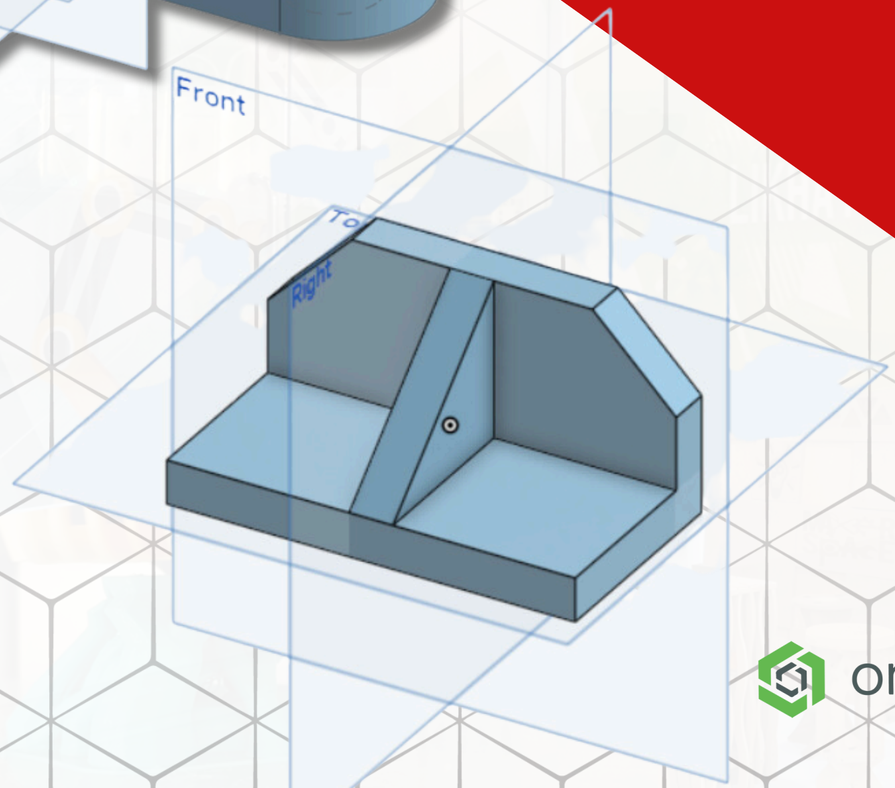

onshape®

LIKHA FABLAB

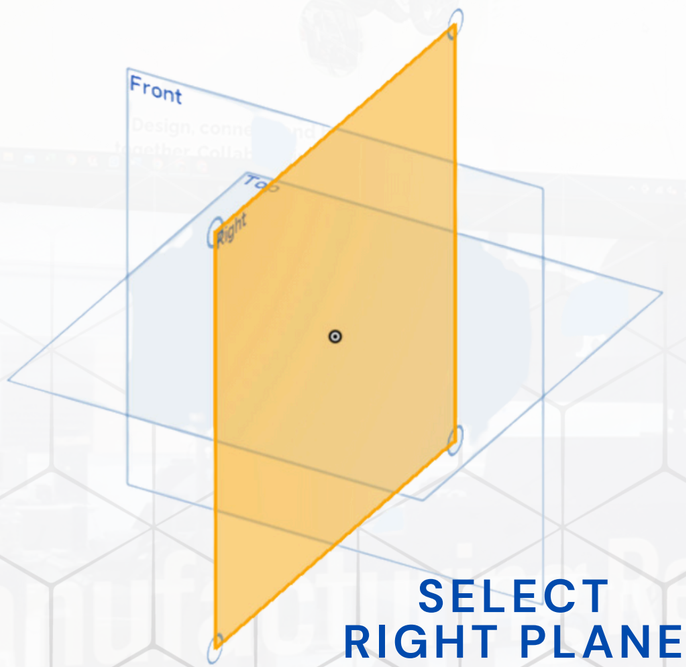

SELECT RIGHT PLANE

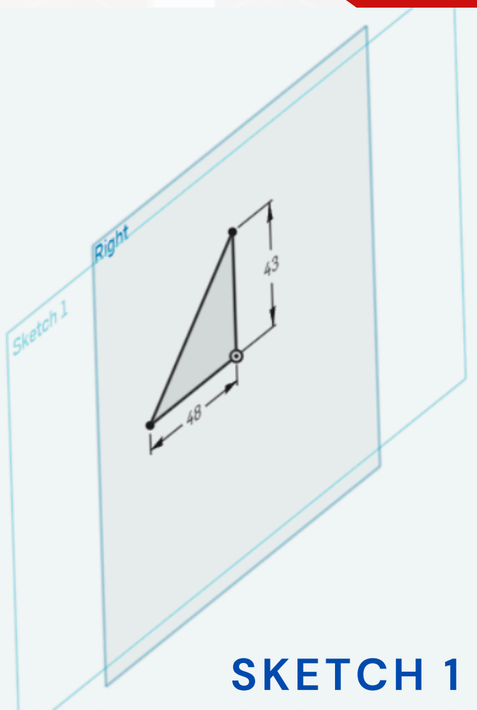

SKETCH 1

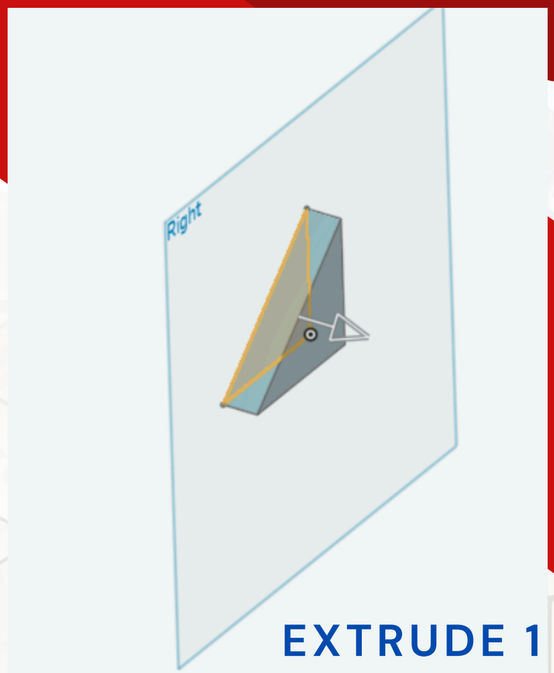

EXTRUDE 1

In this design, it is more convenient to start creating a sketch of the right triangle-shaped section of the part. Select the Right plane and complete the 2D drawing of a triangle in this view. Afterwards, specify the length of the each line with the DImension tool and then use the Extrude tool to convert the surface to a solid.

onshape®

LIKHA FABLAB

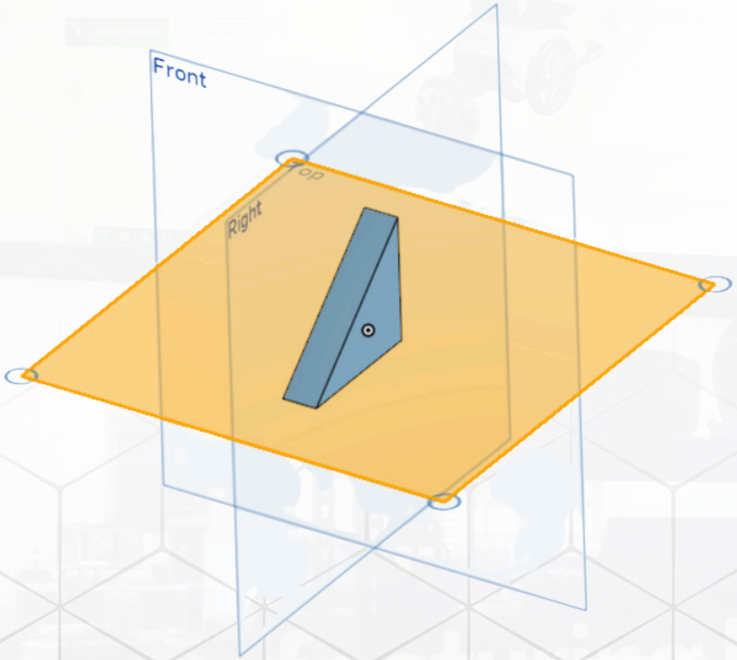

SELECT TOP PLANE

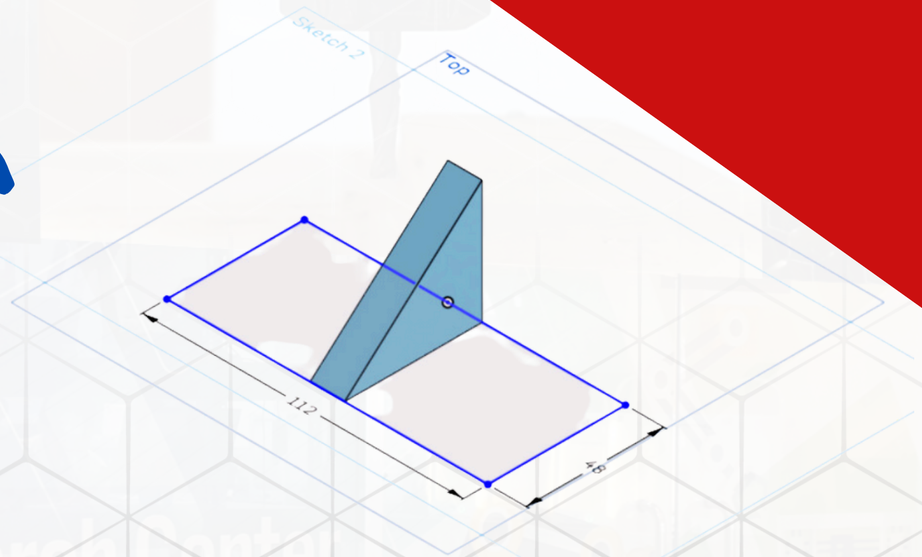

SKETCH 2

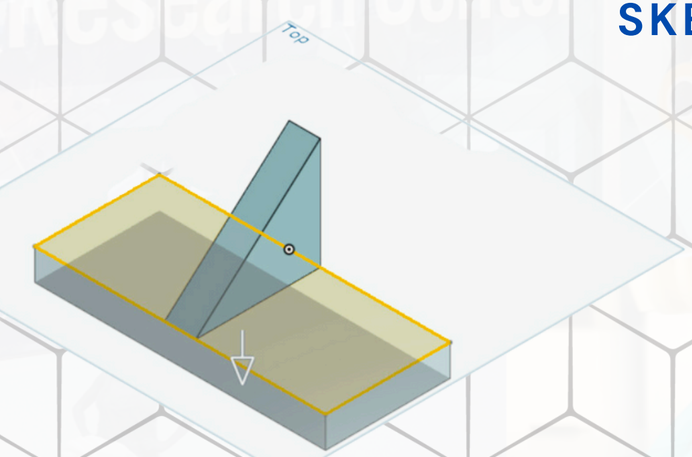

EXTRUDE 2

onshape

LIKHA FABLAB

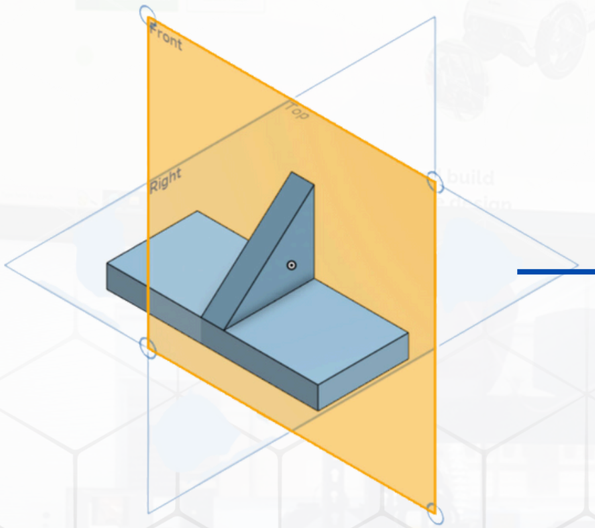

SELECT FRONT PLANE

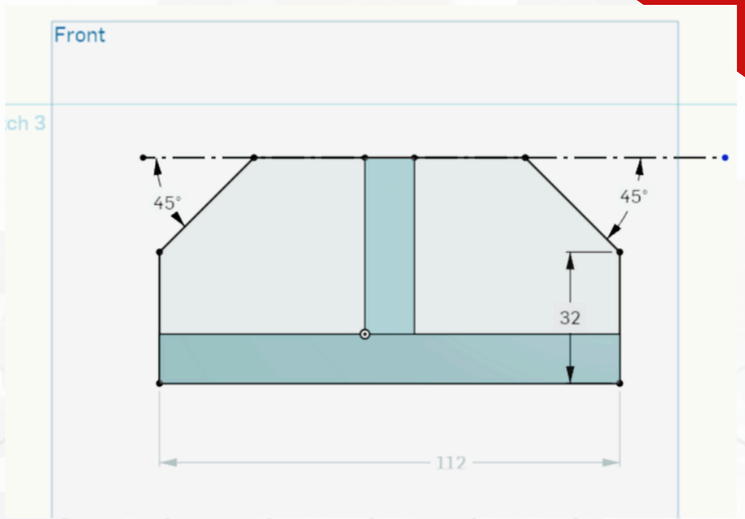

SKETCH 3

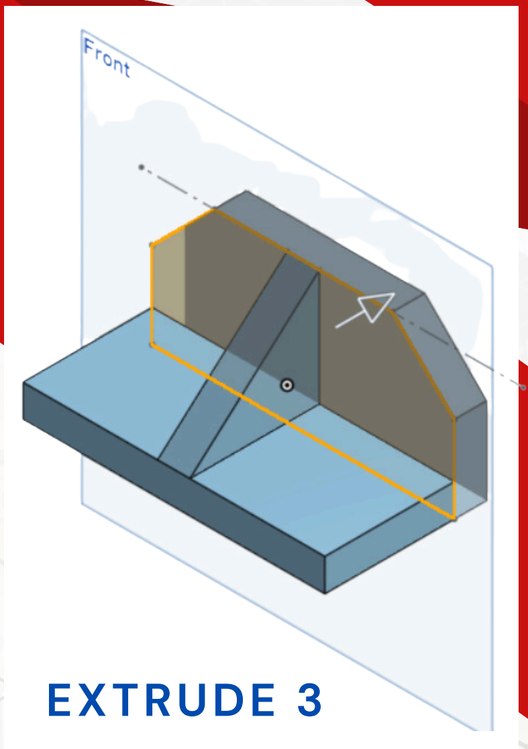

EXTRUDE 3

In the third sketch, once you have sketched the diagonal lines forming the surface, create a reference line using the Construction function or enable Sketch and then click “l” and “q” on the keyboard consecutively. The angle can be constrained with the Dimension tool while both the diagonal line and referece line are selected. You will be able to enter the desired angle.

onshape®

The last sketch needed to complete this part is a circular shape with Extrude – Remove applied to it. Select the Top plane and on the face of the created Sketch 2 earlier, draw a round surface on each half with a centerpoint that is equidistant to a reference in the middle of the extruded rectangle. Use the Dimension tool to define the required diameter.

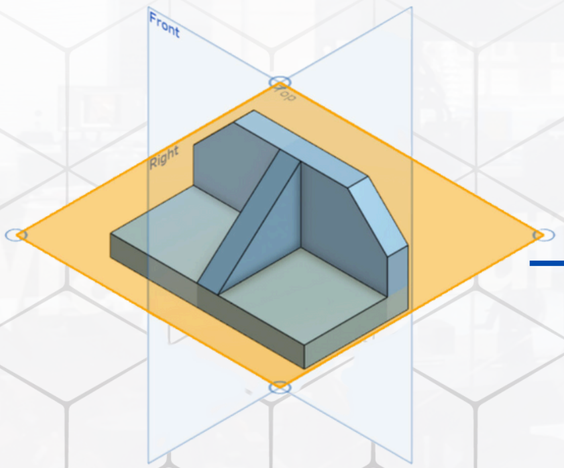

SELECT
FRONT PLANE

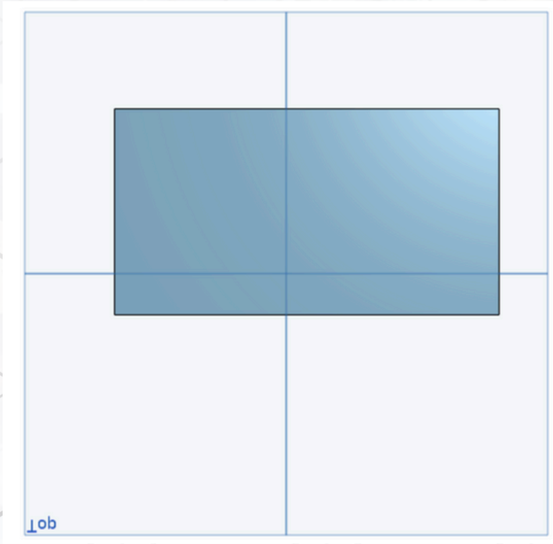

SKETCH 4

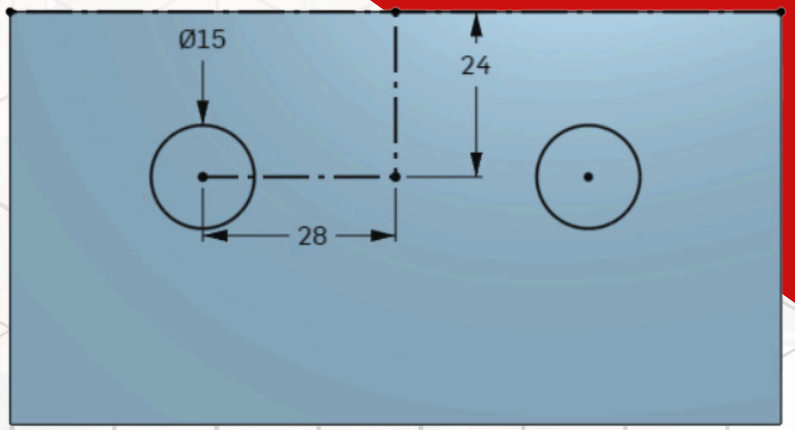

LIKHA FABLAB

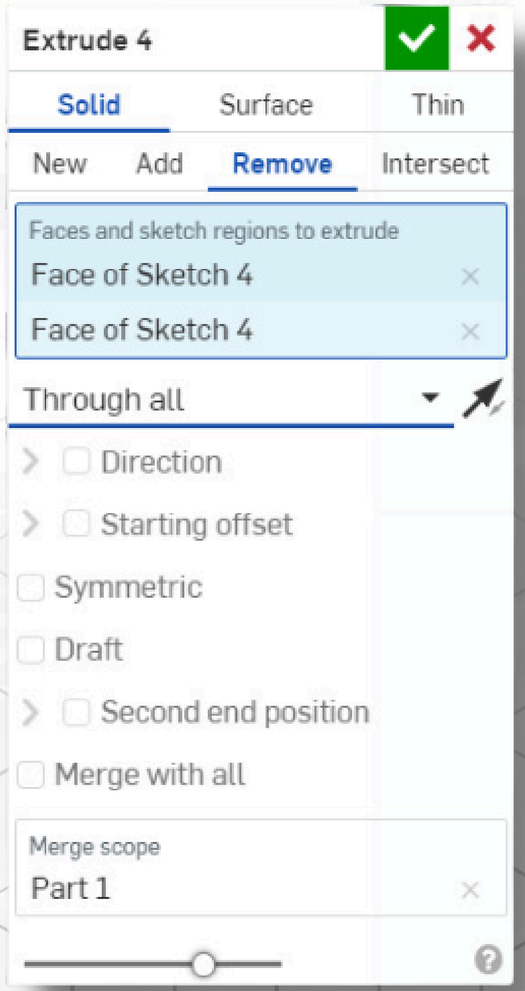

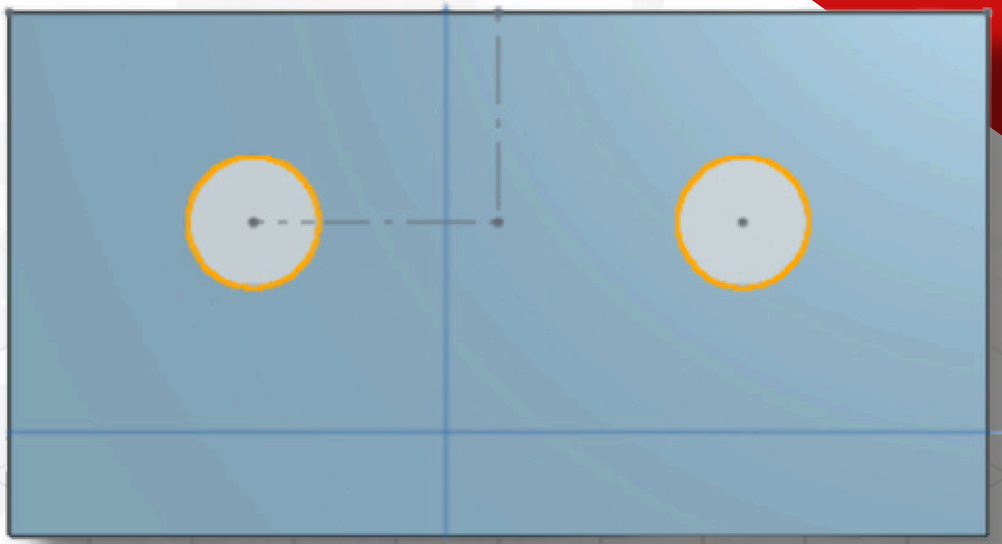

Click the Extrude tool and switch to Remove extrusion. Select the surface of each circle as the faces to extrude and hit Enter or the green check.

EXTRUDE 4

onshape

LIKHA FABLAB

FINAL 3D MODEL

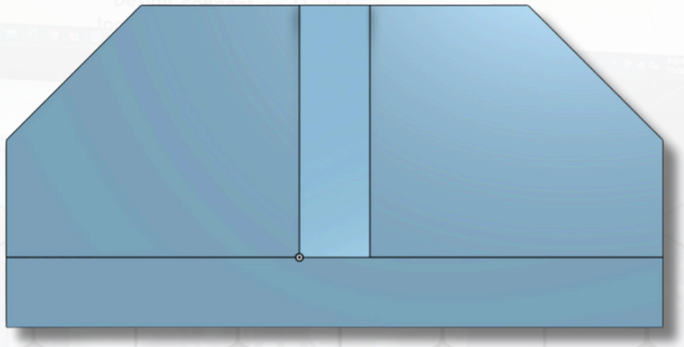

FRONT

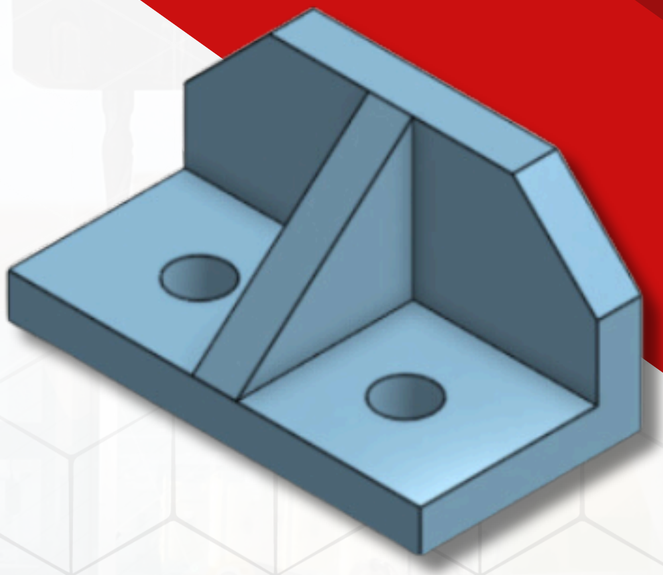

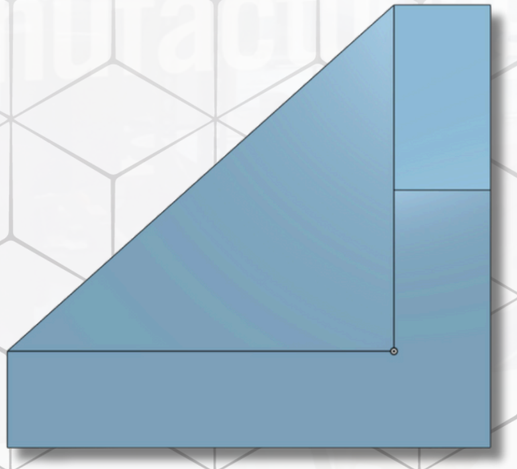

RIGHT

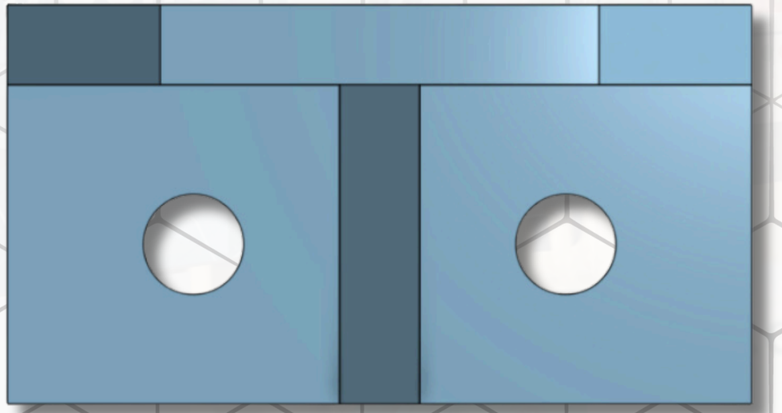

TOP

onshape

LIKHA FABLAB

Exercise

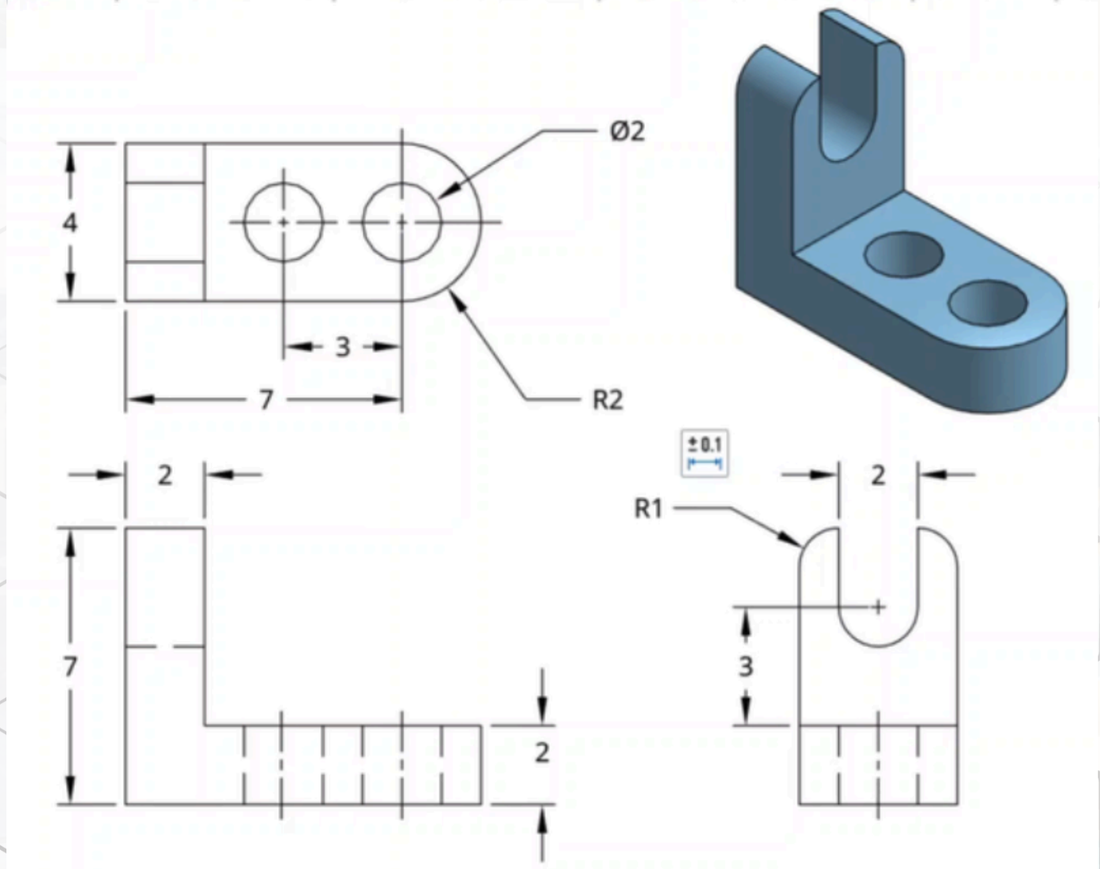

Always try to analyze first the Figure in order for you to identify where you must start.

onshape

LIKHA FABLAB

Start by making a sketch design. One of the optimal way to construct this design is to start creating the vertical part of the figure.

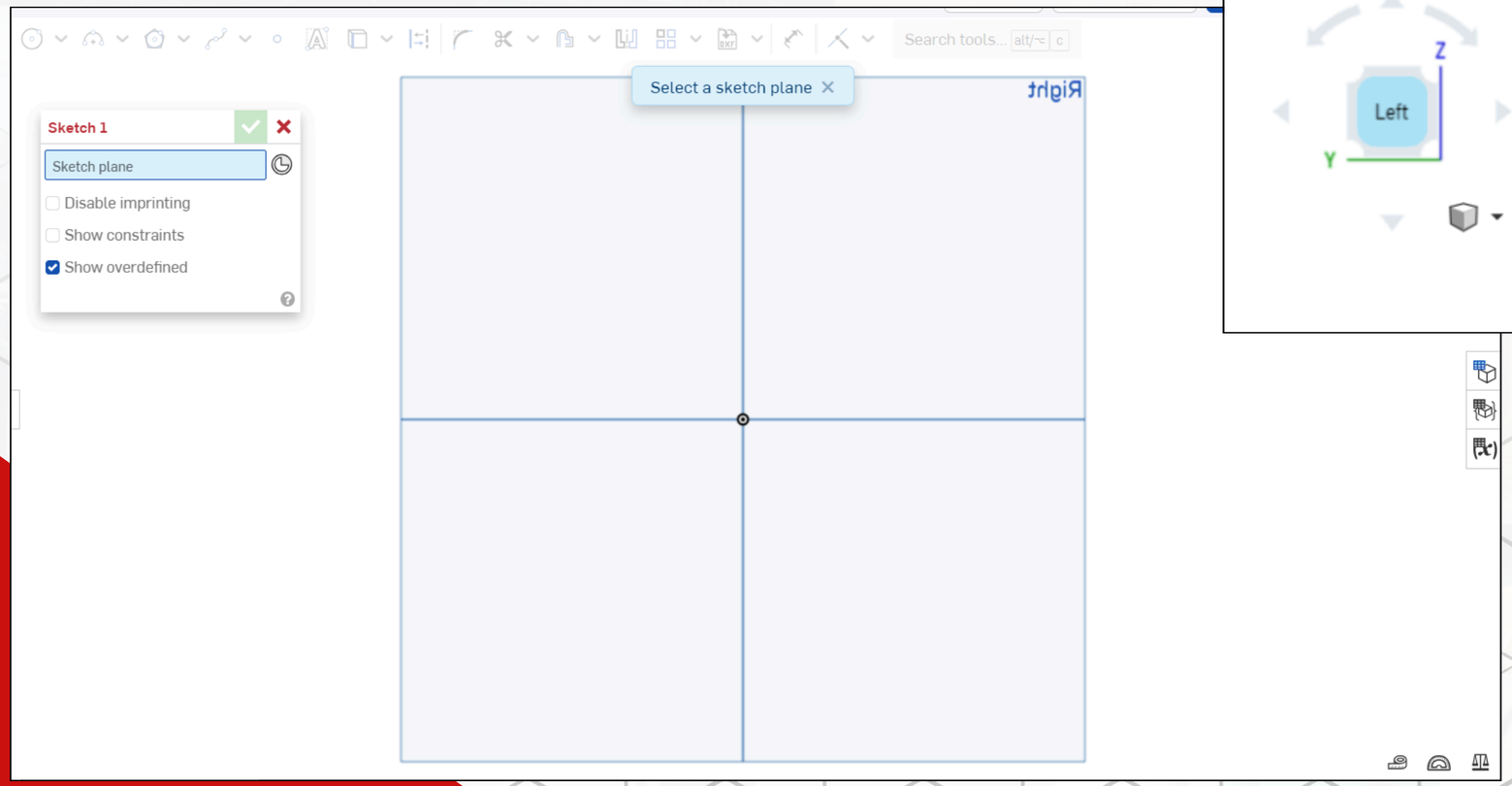

Utilize the view cube for easier access of desired sketch plane. Select the left plane for this design.

onshape®

LIKHA FABLAB

Start by making a sketch design. One of the optimal way to construct this design is to start creating the vertical part of the figure.

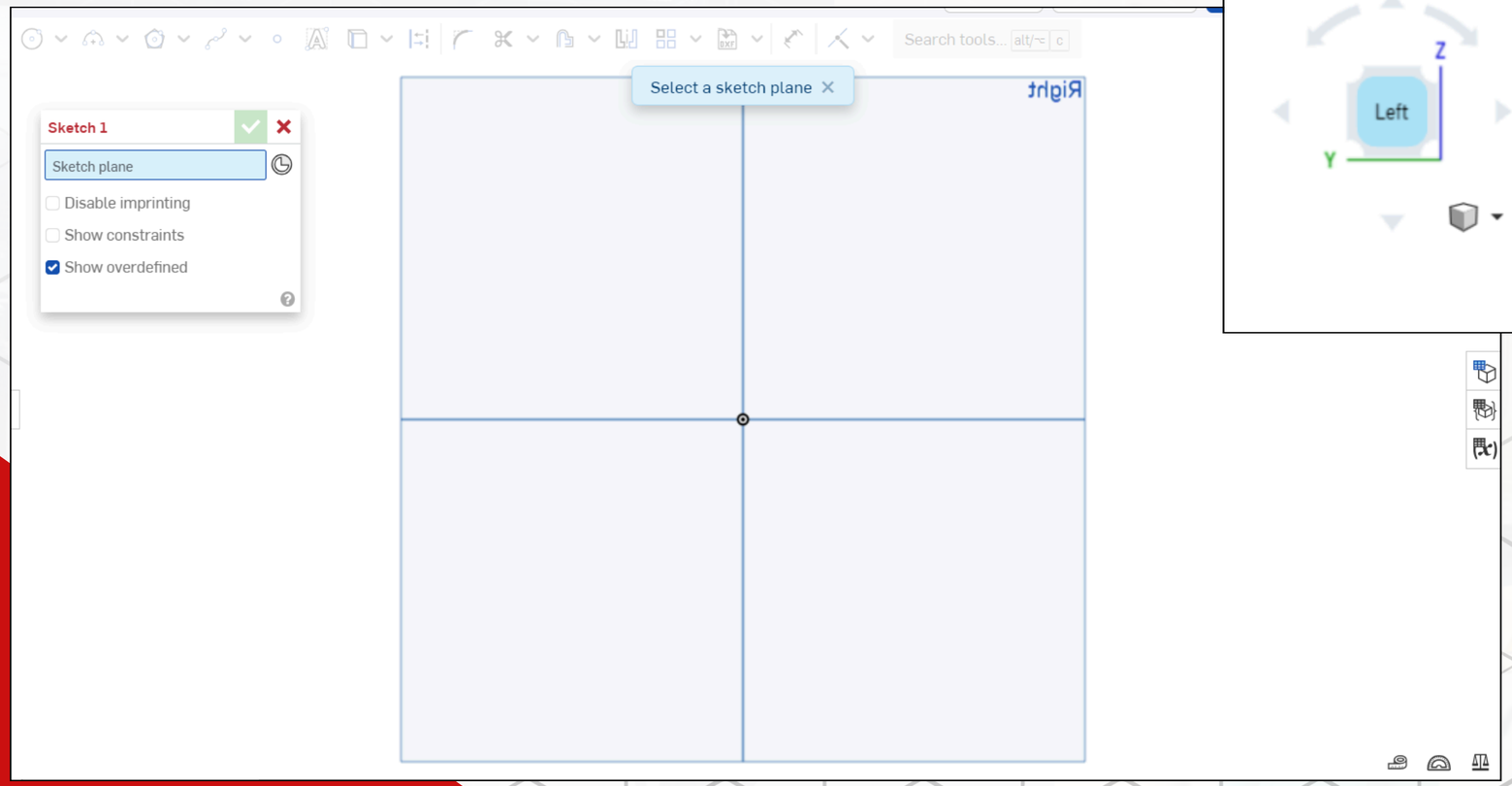

Utilize the view cube for easier access of desired sketch plane. Select the left plane for this design.

onshape®

LIKHA FABLAB

Draw initial rectangular sketch of the design based on the given dimensions using the line tool.

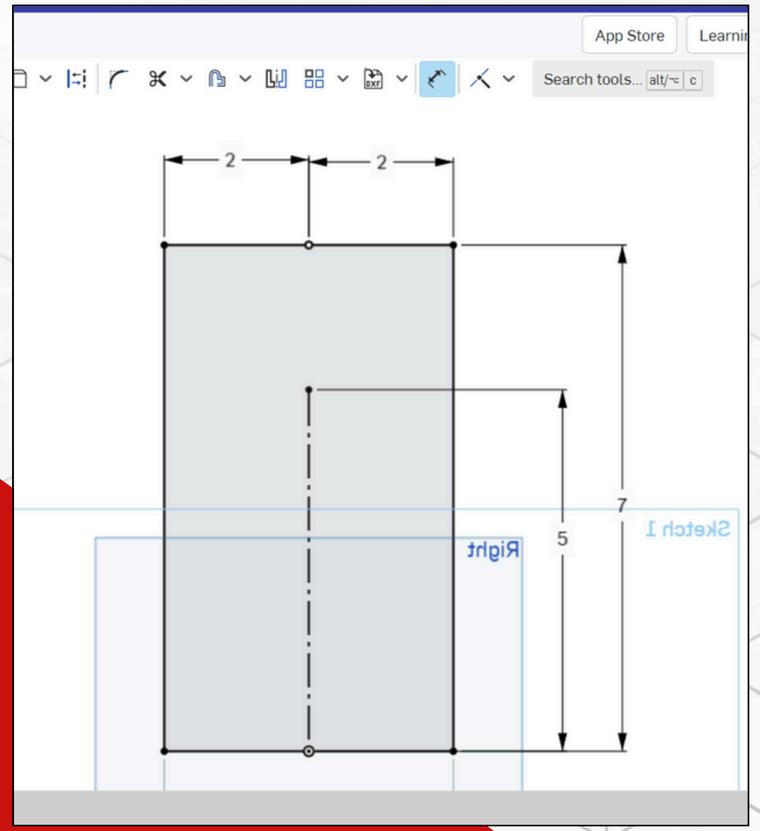

Next, create a construction guideline to find the accurate center of the circle.

Click the line tool first, followed by the construction tool.

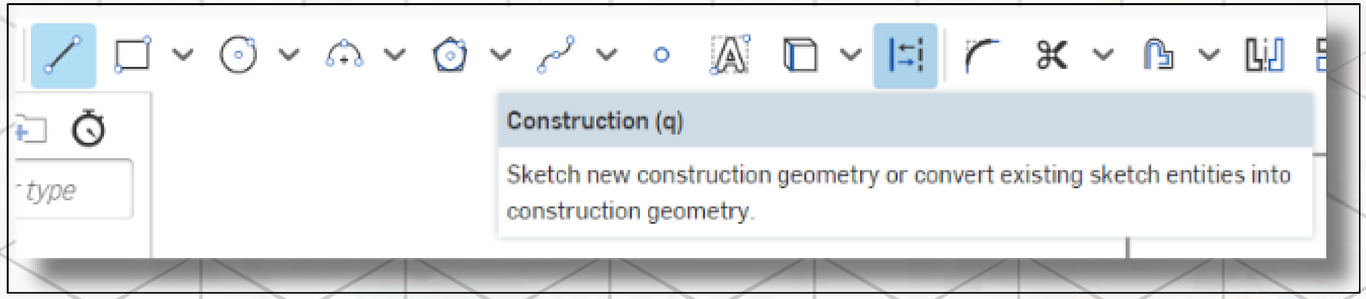

onshape

LIKHA FABLAB

Sketch a 2D circular shape with the tool highlighted in the image.

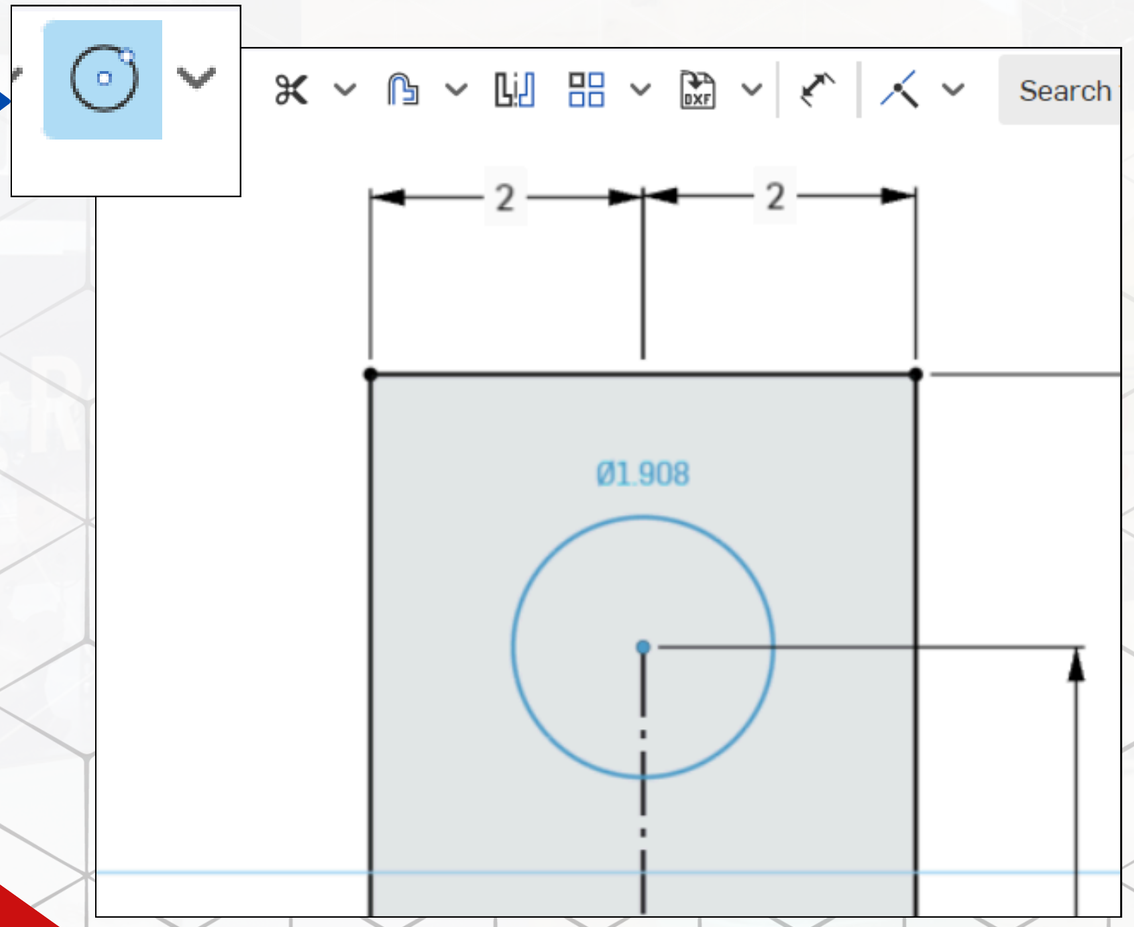

onshape®

LIKHA FABLAB

Enable the Dimension tool and click the entity for which the size will be changed. In this case, the 2D circle will be given a different diameter value. The change will automatically be applied to the sketch.

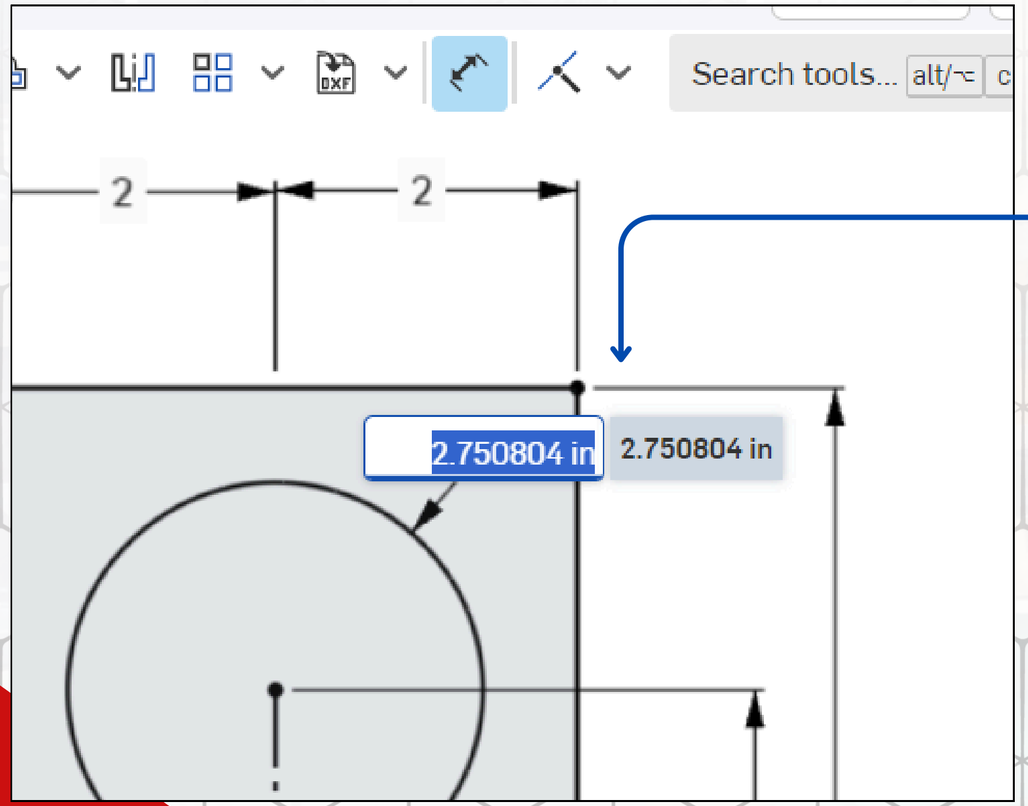

onshape®

LIKHA FABLAB

In order to fillet the edges of a sketch, click the lines which are perpendicular to each one another. Make sure that the lines or entities are in the same sketch.

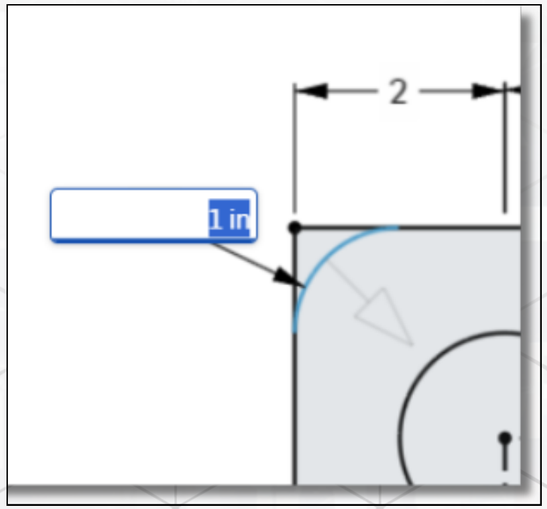

Afterwards, select the Fillet tool and you will be prompted to enter the desired radius.

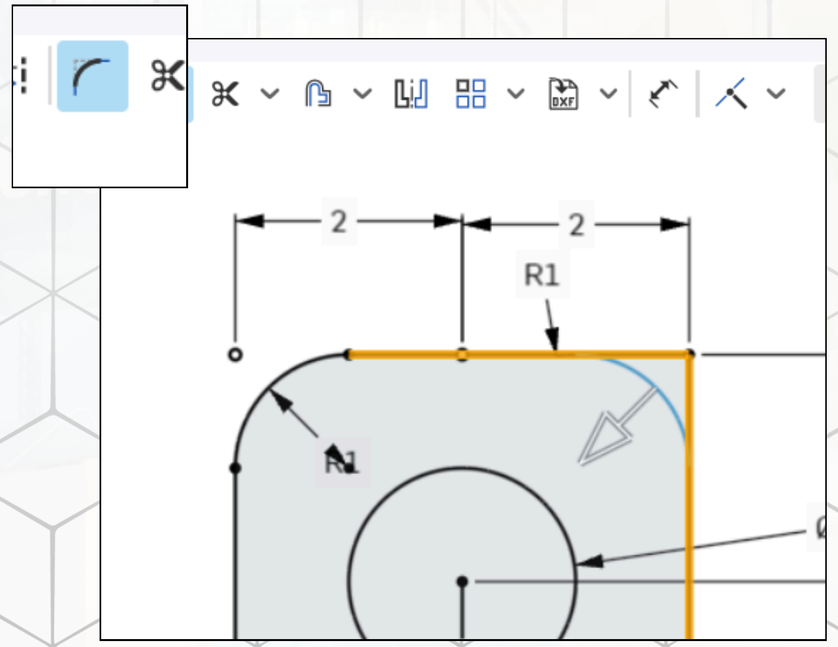

onshape

LIKHA FABLAB

Use the sketched 2D circle as a reference in creating the hollow U-shaped section of the part. First, sketch a line that extends from the points of the circle shown below towards the line connected to the two filleted edges. Once this is done.

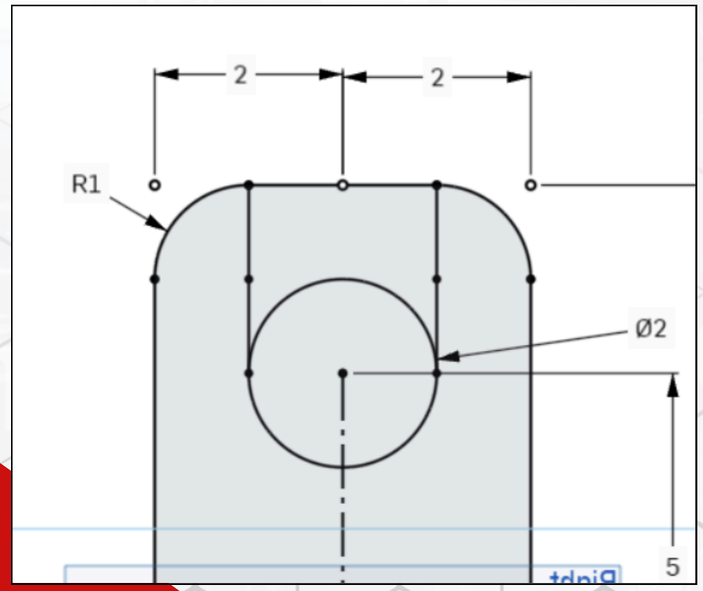

Use Trim on this connecting line and the circle half as shown in the image.

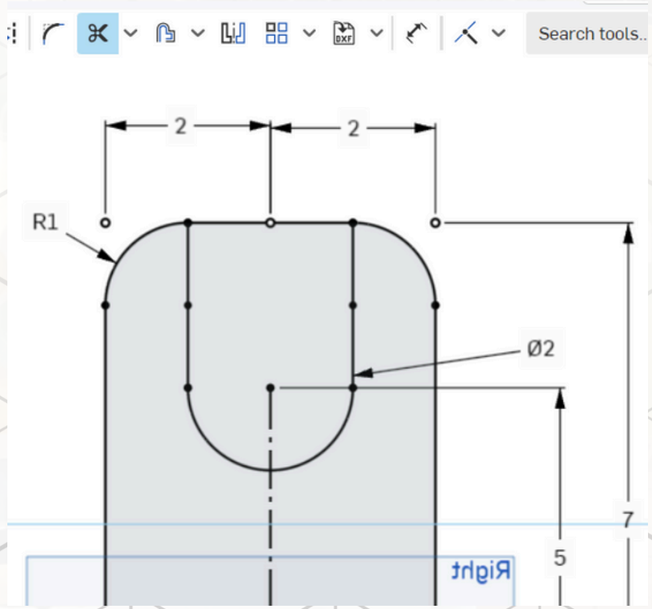

onshape®

LIKHA FABLAB

Lastly, apply a New extrusion on the created 2D design while the face of the sketch is selected.

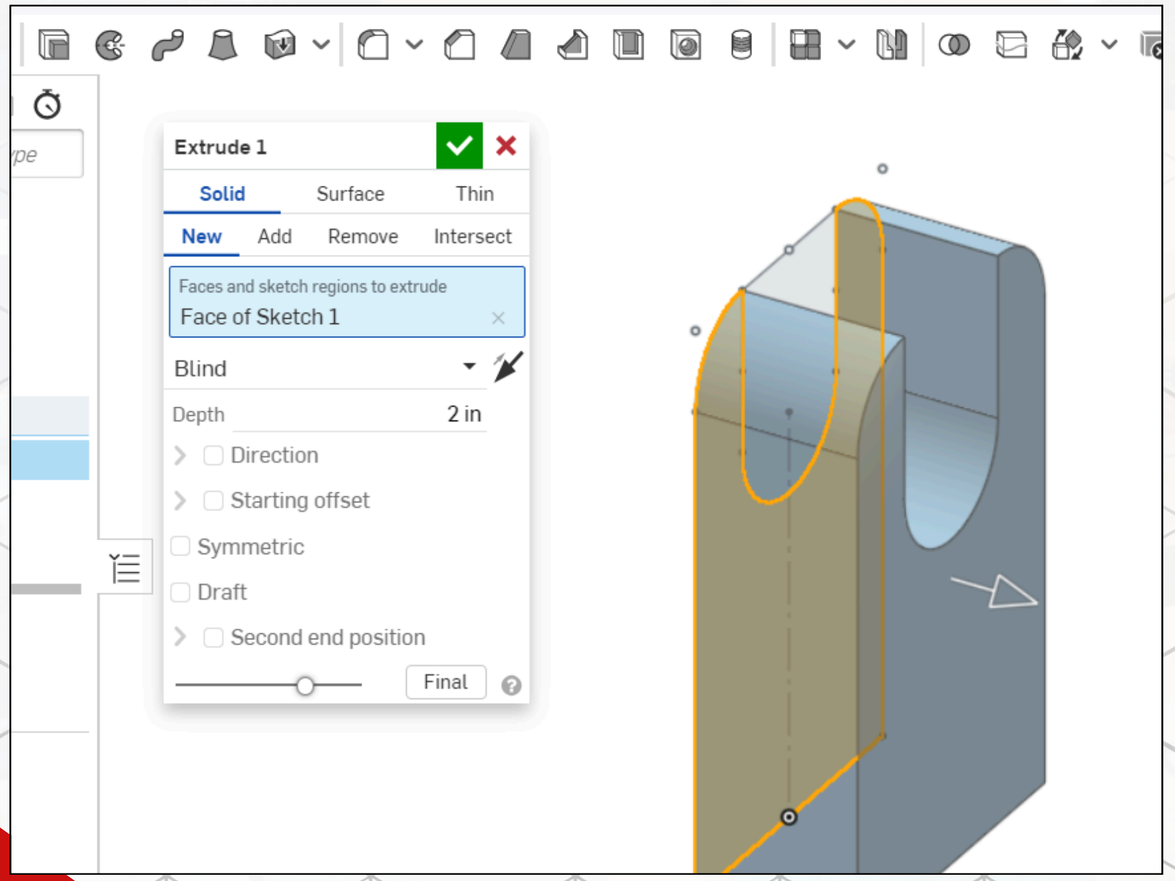

onshape®

LIKHA FABLAB

Create a second sketch. Select the top plane as the sketch plane to draw the base part of the figure.

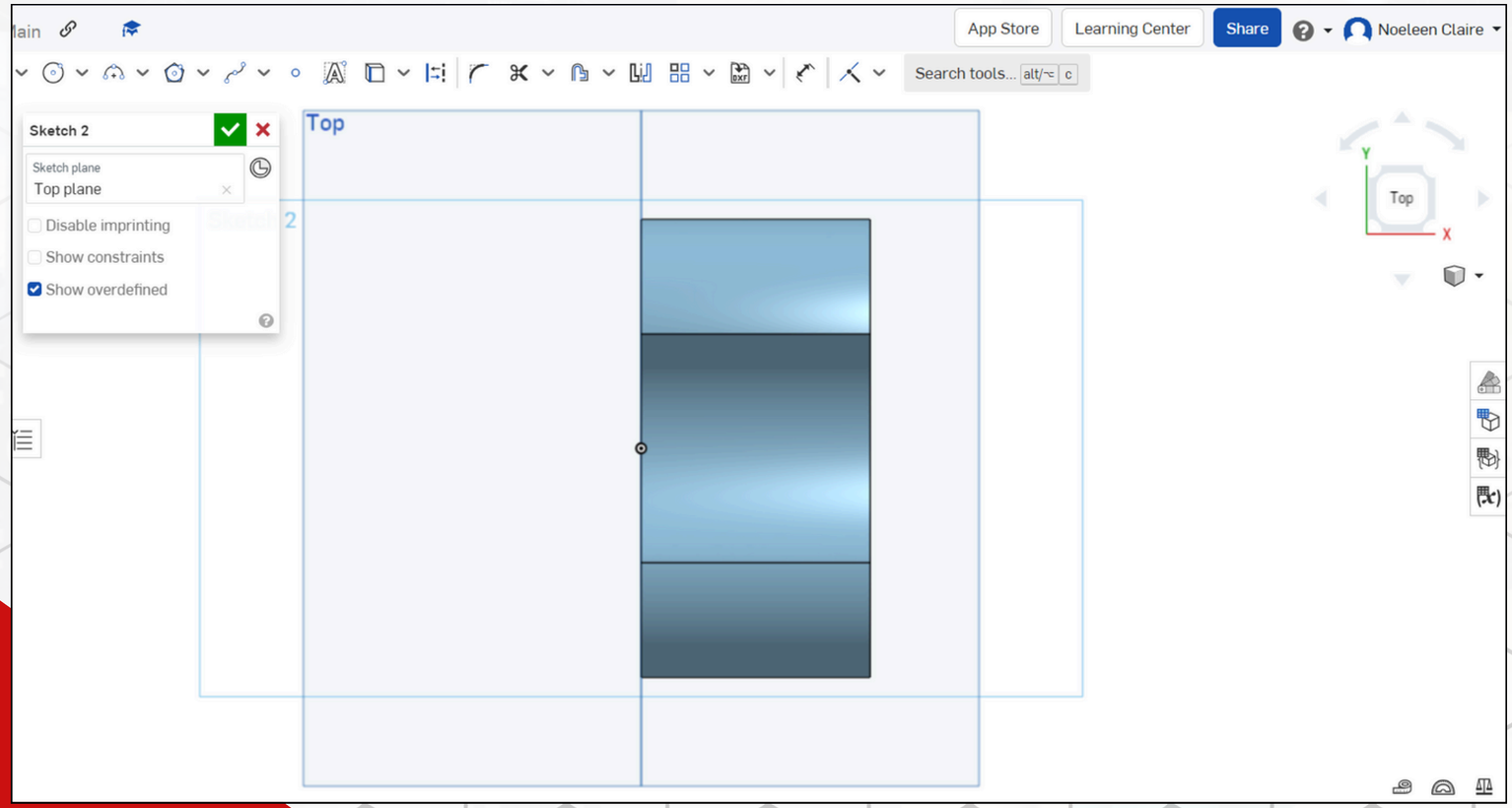

onshape®

Utilize the construction guideline again to locate the center of the circles.

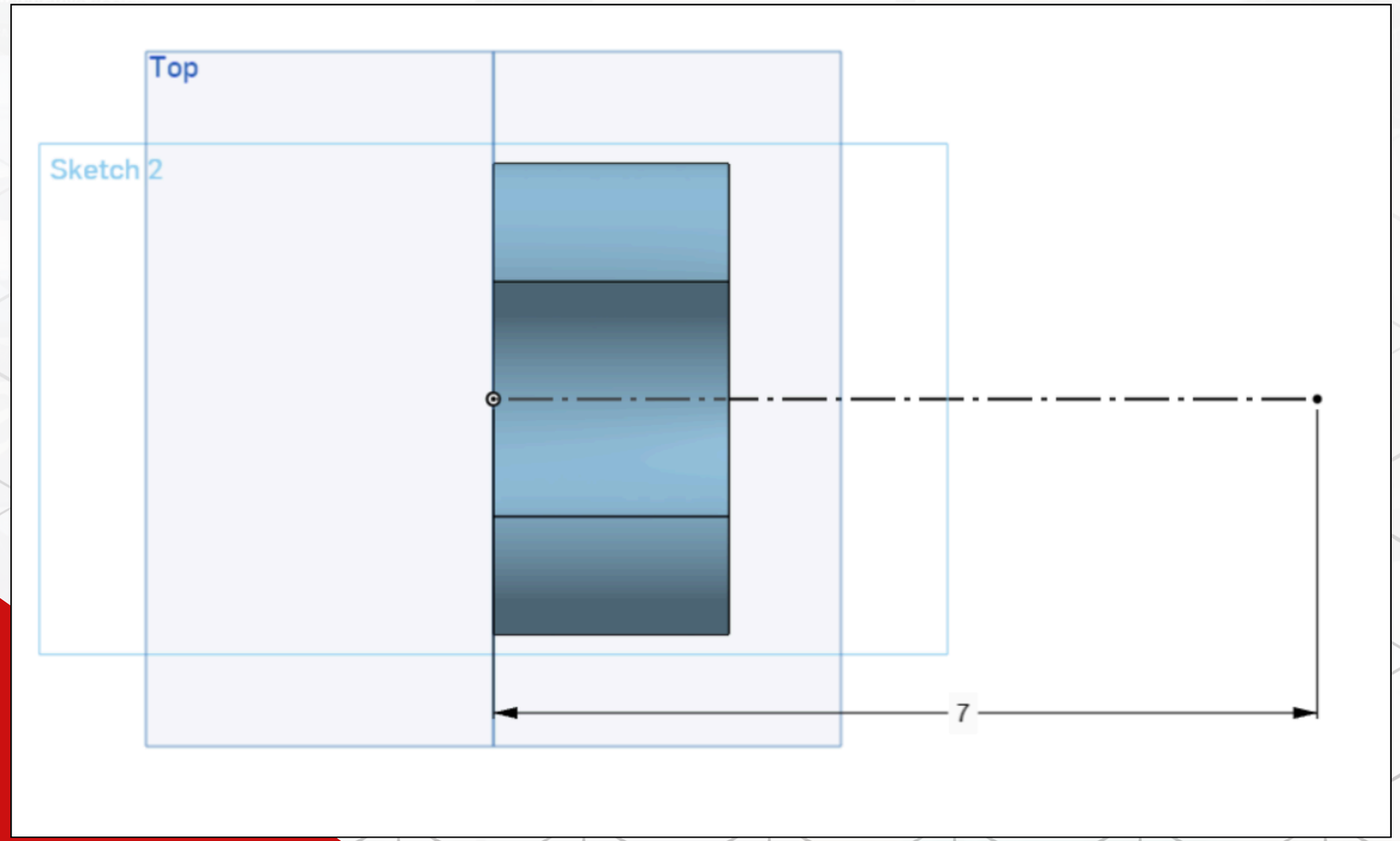

LIKHA FABLAB

Draw the circular elements on the figure. Set the constraints between elements by selecting the two entities and choosing which type of constraints to apply from the highlighted tool shown above.



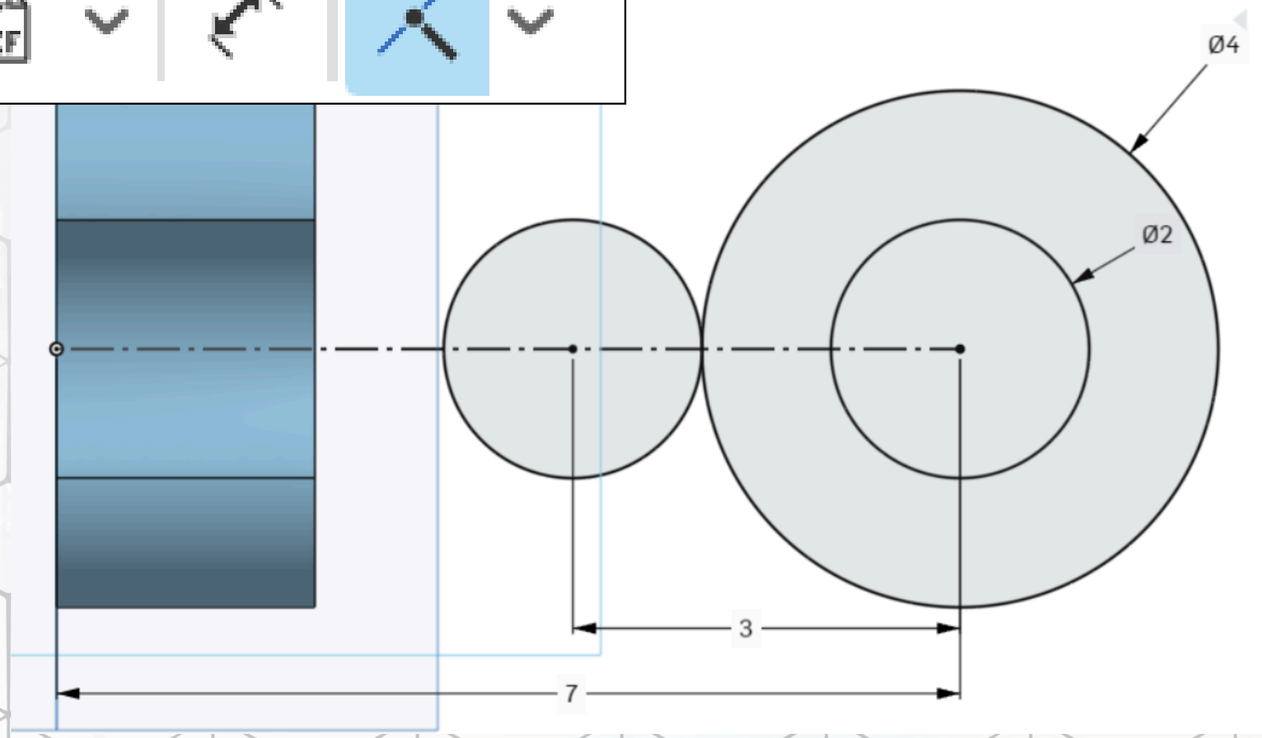

onshape

LIKHA FABLAB

Draw the lines that will encloses the base sketch of the figure.

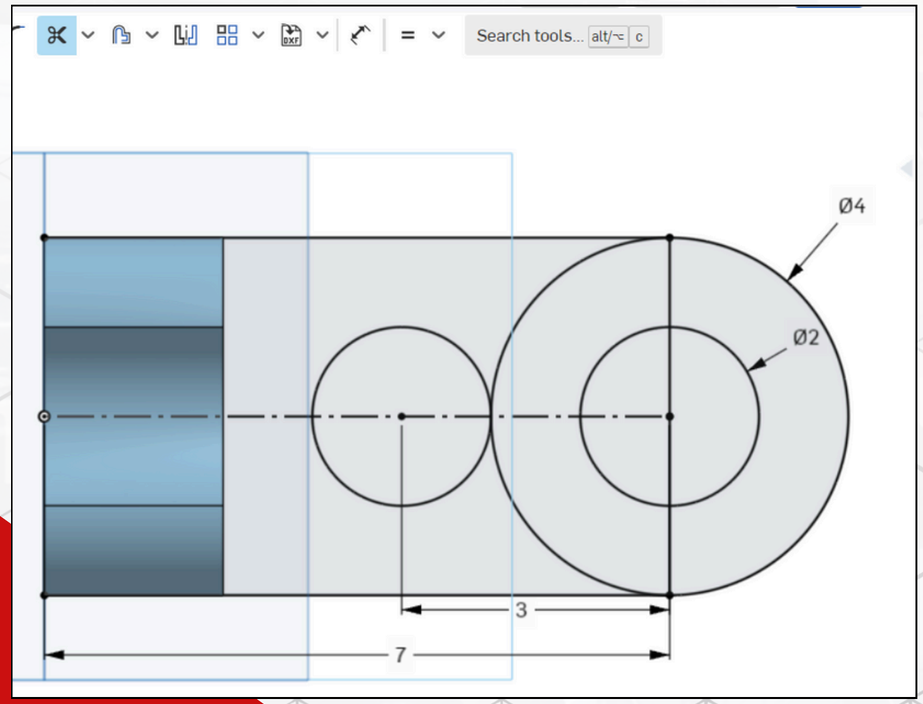

Finish the second sketch by trimming unneeded edges or parts of the entities.

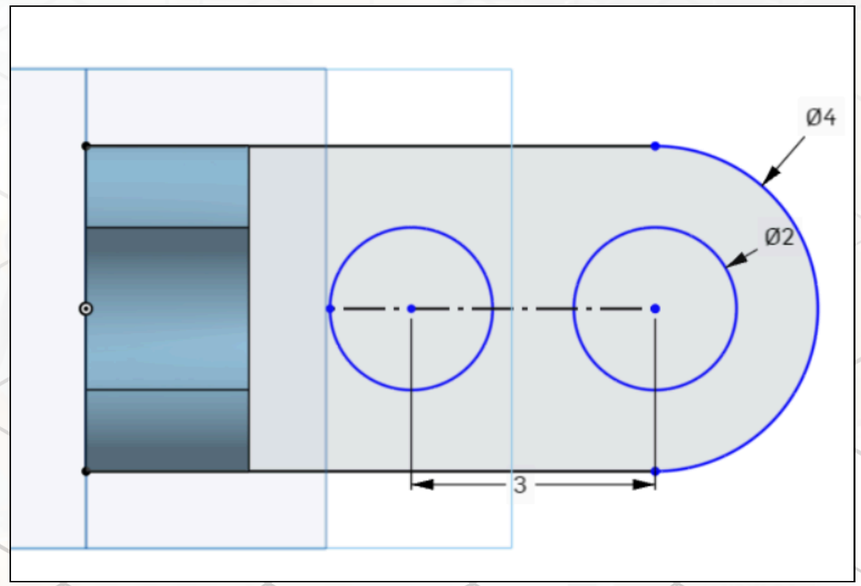

onshape

LIKHA FABLAB

Lastly, proceed on the extrusion of the sketched base. Select the face of the second sketch to extrude.

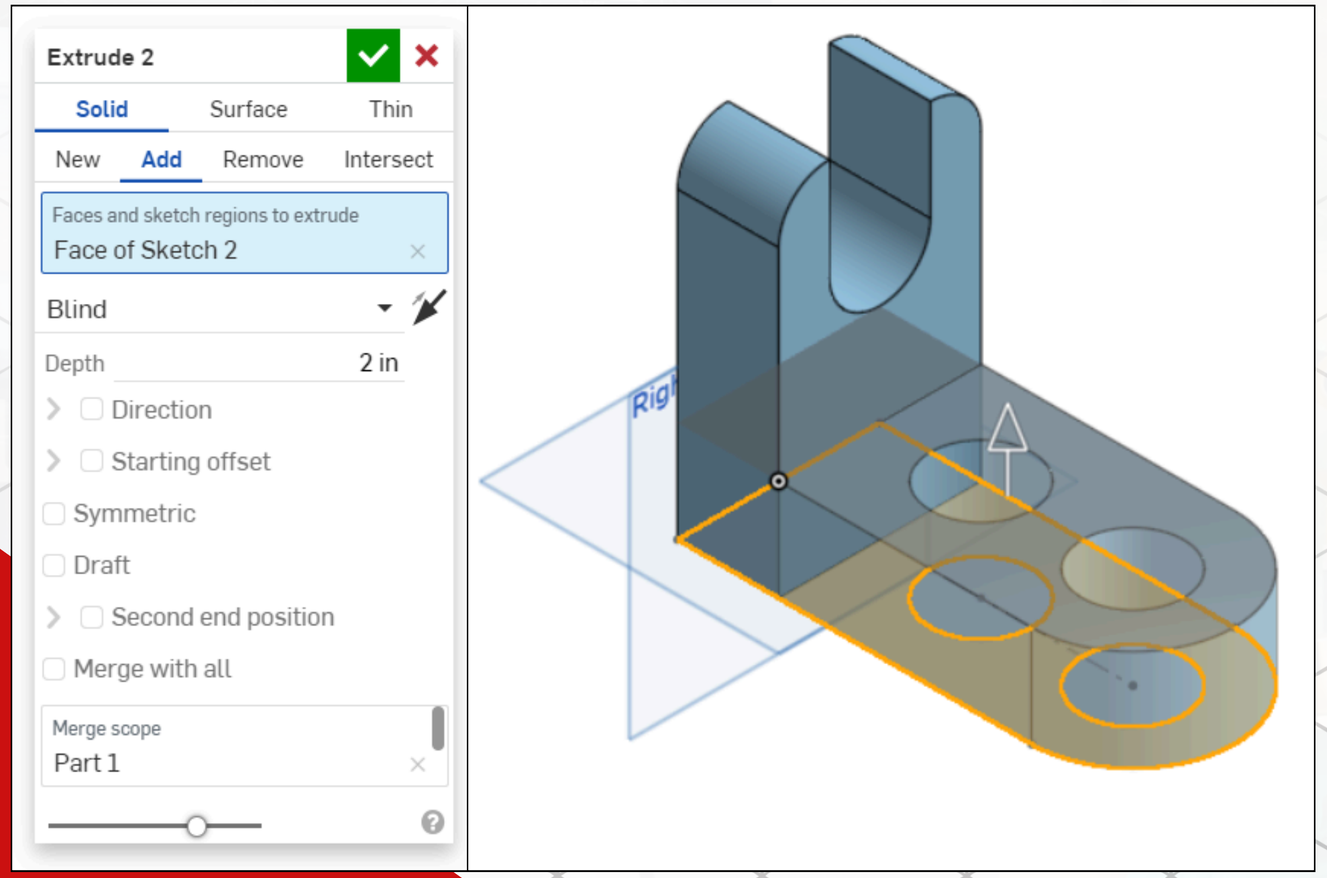

Input the dimensions of depth and positive Y direction of extrusion.

onshape

LIKHA FABLAB

Process Of Exporting

1. Right-click on part “PartStudio” tab in bottom left corner
2. Click on “Export...”
3. In “File name” give the file a name (color, part, name)
4. In “Format”, change “PARASOLID” to STL by clicking and going down to STL
5. Change “Units” to “Millimeters” by clicking and going down to Millimeter
6. Leave everything else alone and click “OK” when you are done
7. This will download the file to your “Downloads” folder

onshape®